1921

Westinghouse

Voltage Regulators For A-C. Generators

Form 1467

Westinghouse Electric & Manufacturing Company

GENERAL OFFICES & WORKS,
EAST PITTSBURGH, PA.

IN REPLY PLEASE ADDRESS THE COMPANY
AND REFER TO _____

GEO. H. COX,
DISTRICT MANAGER

10 HIGH STREET, BOSTON, MASS.

Sept. 5 1924

Noble & Cooley Company,
Granville,
Massachusetts.

Gentlemen:-

Your letter of September 3rd regarding liquid for dash pot of type AB-1 Voltage Regulator has been sent to us, as you are in this territory.

We wish to thank you for your inquiry and order, and also for the very complete information you furnished.

As we bill no invoices for less than $1.00, I should say that it would be much cheaper for you to get a small quantity of pure distilled water and a small quantity of any fine grade of watch oil with which to fill your dashpot. I am enclosing a book of instructions which we usually supply with these regulators which will help you to get your dashpots adjusted again. On page 3, section 3, is the information regarding level; and on page 23, sections 174 to 180, you will find full instructions regarding refilling and care of dashpots.

Although we appreciate the order, we feel that it would be more fair to you to save you the excess charge over the low cost of oil or water and send you a book of instructions which will give you a lot of good information on your regulator.

As I am to represent this Company in your section in the near future, I am looking forward to calling upon you and also to being at your service in whatever way you may wish.

Very truly yours,

R. D. Lawlor

R.Lawlor HNK

Industrial Division

Digitized by the Internet Archive
in 2017 with funding from
Boston Public Library

https://archive.org/details/westinghousevolt00unse

Westinghouse Voltage Regulators For A-C. Generators

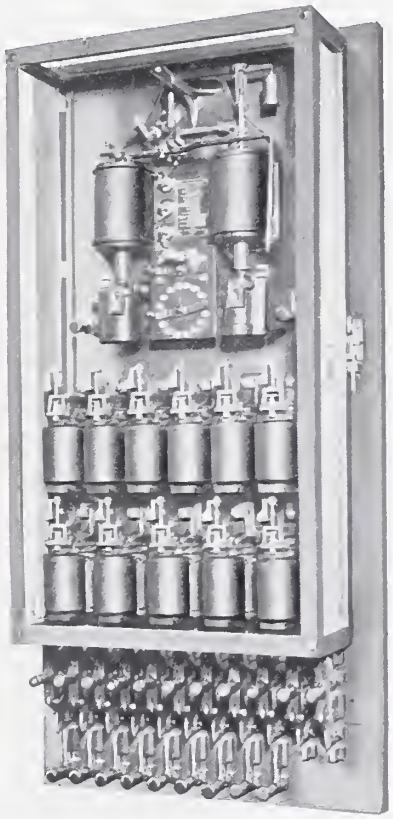

Fig. 1—Type A-C-9 Voltage Regulator

Instruction Book 5155-B

Westinghouse Electric & Manufacturing Company
Newark Works Newark, N. J.

INDEX

	Paragraph	Page
Accessories for Regulators	127–161	16–21
Adjustments for 45–135 volt Exciter System	117–118	14–15
Adjustments for 60-150 volt Exciter System	57–84	8–11
Adjustments of A.C. Generator Field Rheostat	58–64	9
Adjustments of Compound-Wound Exciter	123–126	15–16
Adjustments of Exciter	65–74	9–10
Adjustments of Regulator, Complete Internal	162–209	21–26
Adjustments of Cores and Stems	164–167	22
Adjustments of Counterweight	172–173	23
Adjustments of Dashpots	174–180	23–24
Adjustments for Line Drop Compensation	139–149	19
Adjustments of Main Contacts and Stops	168–171	22–23
Adjustments of Pivots and Levers	163	21
Adjustments of Pivot Bearings and Armature	187	24
Adjustments of Relay Contacts	189–190	25
Adjustments of Relay Spring	199–202	25–26
Adjustments of Vibrating Magnet Spring	181–184	24
Broad Range Exciter System, Adjustments for	119–122	15
Cleaning up Armature Stop	188	24
Condenser Connections	43–44	7
Condensers for Rheostat Shunting Relay	8–10	3–4
Compensation, Complete	142	19
Compensation, Ohmic	157–158	20
Compensation, Partial	159–160	21
Contacts, Main	4	3
Contacts, Caution	198	25
Contacts, Relay	5	3
Contacts for Shunting Relay	192	25
Contacts for V and X Relays	193–198	25
Control Element	162	21
Connections for Voltage Transformer	40–42	7
Dashpots	3	3
Dials, Setting of Compensator	150	20
Exciter Voltage, Range of	57(a)	9
Exciters, Paralleling	97–99	12–13
Exciter, Disconnecting an	99	13
Important	1–10	3–4
Important Operating Instructions	2–10	3–4
Lever, Floating	2	3
Line Drop Compensation, Methods of	130–138	16–18
Operation, Principal of	11–22	4–5
Parallel Operation of Regulators	210–226	26–30
Paralleling A.C. Generators	100–101	13
Preparing Regulator for Service	45–56	8
Putting Regulator into Service for First Time	75–93	11–12
Putting Regulators into and out of Service with Exciters not Arranged for Parallel Operation	108–116	14
Regulators for Use with Exciter not Arranged for Parallel Operation	102–107	13–14
Relays	185–202	24–26
Relay Pivots	6	3
Resistance Box for Regulator, External	30	6
Resistance Box, External	37–39	7
Switches, Reversing and Disconnecting	203–209	26
Table for Dial Setting for Inductive Line Drop Compensation		20
Table for Dial Setting by Ohmic Line Drop Compensation		20
Taking Regulator Out of Service	94–96	12
Unpacking and Placing the Regulator in Position	23–30	6
Volt-Ampere Capacity of Current Transformer	161	21
Voltage Adjusting Rheostat	127–129	16
Voltage Transformer, Connection of	40–42	7
Voltage, Unstable	7	3
Wiring for Regulator	31–36	7

Westinghouse Voltage Regulators For A-C. Generators

GENERAL INFORMATION

Keeping Regulator Clean

1. Always keep the case on these regulators **closed** and for general appearance, keep the case clean both inside and out, by wiping with a clean piece of cheesecloth. The exterior parts can also be kept clean in the same manner. The interior parts of the regulator can be cleaned by carefully dusting with a ½-inch camel's hair brush.

Important Operating Instructions

2. **Floating Lever**—The floating lever of the control element should never operate more than $\frac{1}{16}''$ above or below a central position as determined by the centering post. Adjust the position of this lever by the vibrating magnet spring, as indicated under Internal Adjustments of Regulator.

3. **Dash Pots**—The water level should not be allowed to fall more than ⅛″ below the lower graduation on the window. Clean dash pot and plunger thoroughly if there is any indication of deposit from the water used.

4. **Main Contacts**—These contacts should be inspected about once a month. The contact surface should be bright and lustrous and slightly uneven. If cavities, projections or black spots appear, accompanied by unsatisfactory operation, these contacts should be removed and ground. This should be done on a small, fine grained carborundum stone. Do not use a dirty or oily stone for this purpose. The spring mounted contacts should be ground flat, and the screw mounted contact should be ball shaped.

5. **Relay Contacts**—The rheostat shunting relay contacts should wear a bright mottled surface, blackening at outer edge of this contact is a normal condition of a good contact. A bright mottled surface though somewhat uneven forms a better contact than a newly fitted surface. Contacts should be kept approximately .014″ apart according to gauge No. 14 furnished with the regulator. The gap should never be allowed to exceed $\frac{1}{32}$ inch. If contact surfaces become very uneven, they should be refitted. This is best done by filing with a fine file until surfaces are flat and true. Contacts should be replaced in relays so that one registers squarely over the other and securely fastened. These contacts will spark for a time after being newly fitted. Loose contacts will cause unstable operation and increase the tendency to arc over.

6. **Relay Pivots**—Relay pivots should not be allowed to become too loose as this will result in unsteady voltage. Excess play should be taken up by loosening the set screw over the bearing and forcing this bearing against the pivot. A slight amount of play is necessary between pivot and bearing to prevent binding. Pivot and bearing should be lubricated with a heavy grease or oil to prevent wear and rust. If these pivots and bearings become worn excessively, they should be replaced.

7. **Unstable Voltage**—If unstable regulation is obtained, inspect the regulator and connected circuits for loose contacts.

8. **Condensers for Rheostat Shunting Relays**—On each regulator application it is intended to furnish the proper number of condensers.

9. A moderate amount of sparking at all loads is necessary for the best operation of the relay contacts. Unless the contacts actually flash over at the maximum exciter voltage, the relay will operate satisfactorily. If the contacts flash over, more condenser sections should be added. No advantage, however, is gained by using more than three condenser sections per relay.

10. If the relay contacts build up, that is, if a decided projection is formed on one contact, tending to close the gap, the number of condenser sections should be reduced. If this building up still continues, the number of relays across the exciter field rheostat should be reduced.

PRINCIPLE OF OPERATION

11. These regulators operate on the principle of controlling the alternating-current voltage indirectly, by varying the exciter voltage by means of relays which open and close a shunt circuit across the exciter field rheostat.

12. The control element consists of a cast base on which are mounted all the control element parts. The main control magnet as shown is of the solenoid type, having its core attracted upward and its core stem connected to the floating lever, which is pivoted to the bell crank lever of the vibrating magnet. A counterweight is used to assist the pull of the main control magnet, and to bring the lever and core to a balanced position at the normal voltage to be regulated. The vibrating magnet is also of the solenoid type, having its core attracted upward. Its core stem is connected to one end of the bell crank lever which is pivoted to the base, and its opposite end carries the floating lever of the main control magnet. The pull of this vibrating magnet is assisted by a single spring, as shown. These two magnets are energized from the same voltage transformer and actuate the movable main contact into and out of engagement with the fixed contact. These magnets are very sensitive and are provided with adjustable dashpots.

13. The relays are wound with two opposing windings, one of which is permanently energized while the other is energized intermittently through the main contacts. Springs on the relay armatures pull the relay contacts closed when the magnet is de-energized by equal currents in the opposing windings. When the main contacts are open, one circuit is interrupted and the other winding energizes the relay magnet and pulls the relay contacts open. Hence, the closure of the main contacts cause the immediate closure of all relays contacts. Opening of the main contacts causes the opening of all relay contacts.

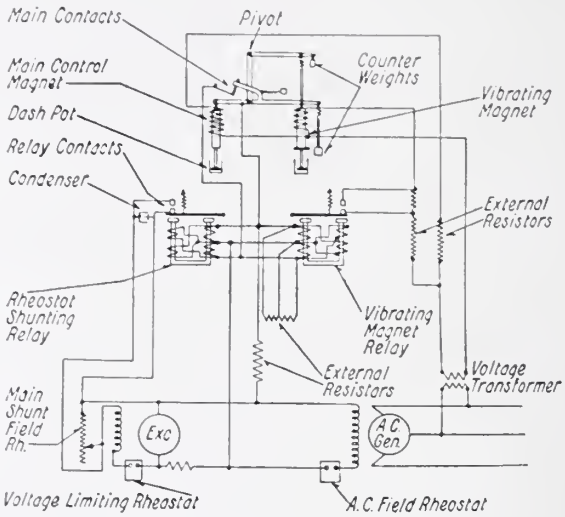

Fig. 2—Schematic Diagram of Type AB-1 or AE-1 Voltage Regulator

14. An inspection of the schematic diagram Fig. 2 shows one of the relays called the vibration relay connected so that the closure of its contacts shunts a small portion of the resistance in series with the vibrating magnet, thus increasing its pull and opening the main contacts. The opening of the main contacts open all relay contacts and inserts the full resistance into the vibrating magnet circuit weakening the pull and closing the main contacts again.

15. From the above, it is evident that the system consisting of the main control magnet, vibrating magnet, levers, rheostat shunting and vibrating relay constitutes a vibrating system when the circuits are properly energized and the control element balanced.

16. A necessary condition to the continuous vibration of the system is that the weight of the vibrating magnet core and the bell crank lever must be exactly balanced by the tension of the control spring plus the average pull of the magnet. This follows from the fact that when the system is vibrating the main contacts merely play on each other without exerting or requiring any appreciable pressure, but they compel the lever system to assume a definite

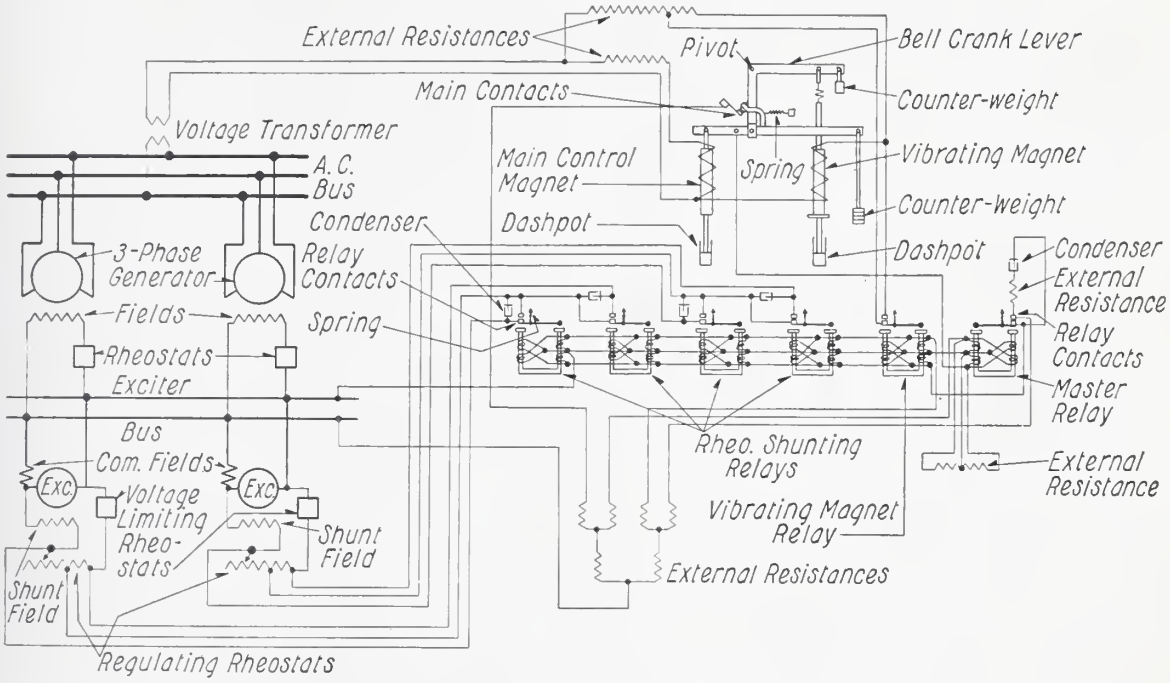

Fig. 3—Schematic Diagram of Type AB-4 or AE-4 Voltage Regulator

mean position. Since no force is transmitted through the main contacts, all the forces in the vibrating magnet system must be in equilibrium about the main pivotal point of the bell crank lever, that is, the spring tension and the magnet pull must balance the weight of the moving parts.

17. For a given line voltage, there is a definite upward pull on the vibrating magnet core when the vibrating relay contacts are open, and a definite pull of a greater value when the relay contacts are closed. When the vibrating magnet is in action the upward pull of the magnet varies between the two values, contacts open, and contacts closed. The average or effective upward pull depends upon the length of time the contacts are closed, as compared to the total time of opening and closing, that is, upon the time of contact engagement.

18. Assuming a condition of continuous vibration, an inspection of the lever system shows that for each position of the floating lever, as determined by the main control magnet core, there is a definite position of the bell crank lever and a corresponding definite tension of the control spring. Since the spring tension added to the average magnet pull must always equal a constant force, namely the core weight, it follows that a change in spring tension compels a corresponding change in the average magnet pull and, therefore, of the time of contact engagement which produces this average pull. Hence, for every position of the floating lever there is a corresponding definite time of contact engagement.

19. When the regulator is connected to the system, the rheostat shunting relays open and close a circuit across the shunt field or regulating rheostat of the exciter and the effective resistance of this rheostat is determined by the time of contact engagement. For example, the longer the contacts remain closed, as compared with the time of opening and closing, the less will be the effective resistance of the exciter field rheostat, and, therefore, the higher the exciter voltage. An increase in time of contact engagement causes an increase in exciter voltage and a corresponding increase in excitation of the alternating current generator. Since it has been shown that the position of the floating lever determines the time of contact engagement and the time of contact engagement determines the alternating-current generator excitation, it follows, that the position of the floating lever determines the excitation of the alternating-current generator.

20. The main control and vibrating magnets are energized from the alternating-current

bus. The main control magnet requires a certain alternating-current voltage to balance the weight of its core. The system voltage must come to equilibrium at this value, for if the alternating-current voltage is less, the pull of the main control magnet will be unable to sustain the weight of its core which will move downward, thus increasing the time of contact engagement and therefore, increasing the generator excitation. This excitation must continue to increase until sufficient alternating-current voltage is developed to re-establish the balance between the core weight and the magnet pull.

21. When in service, maintaining constant voltage under steady load, the regulator will have a definite rate of vibration and time of contact engagement which corresponds to a definite effective resistance of the exciter field rheostat. This effective resistance produces an exciter voltage sufficient to maintain the alternating-current voltage for which the regulator is balanced. If a load is thrown on the system which lowers the alternating-current voltage the main control magnet is weakened, thus upsetting the balance between the magnet pull and the core weight, allowing the core to descend. This closes the main contacts and stops vibration completely or if vibration continues it shifts the lower end of the bell crank lever to the right, thus weakening the tension of the control spring which calls for an increased average magnet pull, resulting in an increase in time of contact engagement. Since the vibrating magnet is energized from the alternating-current bus, it pulls, (when vibrating relay contacts are opened, and when closed), are also weakened, and since the average magnet pull for any given spring tension must remain constant, the time of contact engagement must of necessity be much greater than if the main control magnet were acting alone. Since the damping of the vibrating magnet is very slight, the increase in time of engagement for a given drop in alternating-current voltage is almost instantaneous and proportional to the drop.

22. The effective resistance of the exciter field rheostat is rapidly reduced, thus causing the exciter to build up until the alternating-current voltage is sufficient to re-establish the balance between the magnet pulls and core weights. When this balance is re-established, the alternating-current voltage is normal and the regulator continues to vibrate at a new rate and with a longer time of contact engagement.

UNPACKING AND PLACING THE REGULATOR IN POSITION

23. Do not remove the case from regulator or the packing strings securing the cores, etc., until the regulator has been placed in the final position.

24. Before placing the regulator in final position, examine the wiring on the back and see that there are no broken or loose connections.

25. In the case of bracket mounted regulators the brackets are designed so that when properly mounted, the face of the regulator panel will come flush with the face of the switchboard. Half-inch space washers are furnished to bring the regulator flush in case of the 2-inch panels, and these washers are omitted for 1½-inch panels.

26. When a regulator is supplied on its own base, supporting bolts are always furnished, and the short threaded end of these bolts should be placed in the space nuts on the back of the regulator and securely tightened, after which the regulator should be placed in a level vertical position and made secure.

27. In mounting the regulators on their own bases on front of switchboard panels, before placing in position, remove the screws from all numbered terminals on the back of the regulator, and insert in their places the extension terminals furnished for this purpose. See that the split lock-washer is placed on this extension terminal before placing in the regulator terminal.

28. There should be nothing mounted directly back of the regulator which will interfere with the accessibility of the external connection terminals.

29. The necessary drawings showing outline dimensions, location, drilling plan and arrangement of mounting will be furnished with each regulator.

WIRING FOR REGULATORS

30. External Resistance Box for Regulators—These boxes can be located in any convenient dry place, preferably near, but never immediately back of the regulator.

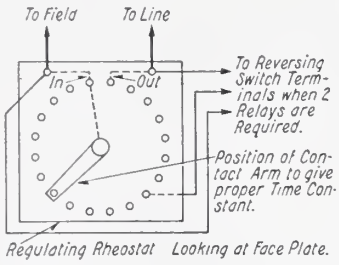

Fig. 4

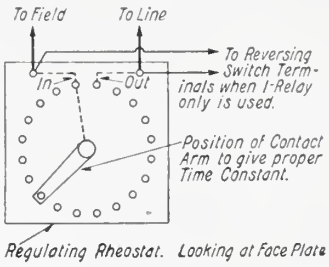

Fig. 5

31. Wiring between regulator, resistance box and machines should be made according to the external diagram of connections for the regulator being installed.

32. Before wiring the regulator, see that all of the single-pole disconnecting switches are open.

33. The rear terminals for external connections are all numbered as indicated on the diagrams.

34. Loose or improper connections will interfere with proper voltage regulation and are hard to locate. Extreme care should be used in making all screw terminal connections and where joints are necessary these should be properly soldered.

35. When regulator is wired according to the diagram it is not necessary to consider the polarity. Any attempt to reduce the number of wires from that shown on the diagram will necessitate tracing out the polarity, and involve possible mistakes and make it difficult to locate trouble.

36. Connections to the regulating or main shunt field rheostat should be made similar to those shown on schematic diagram, Figs. 4, 5. If only one relay is required, connect leads directly across rheostat terminals. In case this rheostat has a section of permanent resistance, care should be taken that relay contacts short circuit only the portion adjustable by face plate.

External Resistance Box

37. The proper connections, to the external resistance box for the desired secondary operating voltage are given on the internal diagram of connections. Select the desired voltage and connect accordingly.

38. The terminals of the external resistance box for the regulator are all numbered to agree with the internal diagram of connections. The resistance between terminals is also indicated on the nameplate of the resistance box.

39. Care should be taken to see that the resistance box bears the serial number of the regulator.

Connections of Voltage Transformers

40. A voltage transformer of not less than 400 watts capacity and having a ratio that will give a normal secondary voltage of between 100 and 120 volts should be used.

41. There should be **no load** on this voltage transformer excepting the **regulator** as a change of load on this transformer would vary its voltage, and consequently the regulator would vary the voltage of the system.

42. To avoid errors in multi-phase systems, care should be taken to connect the transformer to the same phase to which the voltmeters are connected, or if the voltmeter can be plugged to all phases, the plug should normally be kept on the same phase to which the voltage transformer for the regulator is connected. If this practice is followed out, the regulated voltage is always indicated.

Condenser Connections

43. The condensers may be located in any convenient dry place, but as near the regulators as possible in order that the resistance and inductance of the leads do not effect their capacity. Leads to condensers should never be run through conduits. Condensers are only used on the contacts of the rheostat shunting relays, and the master relays. The external connection terminals on the back of the master and rheostat shunting relay contacts are for the condenser connections only. These terminals are numbered as are indicated on all internal and external diagrams of the regulators.

44. The correct number of condensers for the rheostat shunting relays is usually shown in the external wiring diagram furnished with all regulators. One condenser is used across each pair of master relay contacts, and to

limit its charge and discharge a resistor is used in series with same. This resistor is contained in the external resistance box of the regulator, as shown in all internal diagrams for types of regulators having master relays.

PREPARING REGULATOR FOR SERVICE

45. The regulator should first be cleaned to remove dust, etc., accumulated in shipping.

46. Each regulator is fully tested and adjusted before shipping and should, therefore, require no further adjustments. However all the adjustments of these regulators are given in section covering Complete Internal Adjustments of Regulator.

47. The core stems should be connected to their levers by the removable pins in the end of the levers. It should be noted that the pin for attaching the main control core stem to its lever has a **long and short end.** The long end is intended to project through the lever into the centering post to lock the movement during shipment and also to center levers during adjustment. This pin should be reversed, i. e., **the short end should project inwardly through the lever and eye in the core stem, when preparing regulator for service.**

48. After connecting the vibrating magnet core stem to the bell crank lever the **long end** should project inwardly and the side springs should be snapped into grooves on ends of pin.

49. The counterweight with the short stem should be attached to the eye in the right hand end of the bell crank lever. The counterweight with the long stem and adjustable weights should be attached to the eye in the righthand end of the floating lever. Unreel the thread from bracket on compensating dial switch and attach hook to eye in bottom of counterweight. Adjust thread so that the counterweight is slightly out of plumb when floating lever is in horizontal position. The object of this is to prevent the counterweight from swinging in a direction to interfere with the regulation when regulator is in operation.

50. Move lever system by hand to see that it has free movement and is in operating condition.

51. Remove dash pots and clean thoroughly. Fill with **distilled water** and place in position. Adjust water level with fountain pen filler to lower graduation on dash pot window. After regulator has been put permanently in service add a film of light engine oil to top of water between the two graduations.

52. The needle valves of both the dash pots should be turned down to their seats, that is closed, then opened 8 turns. See that lock nuts do not interfere with the closing of the valves. The number of turns can be noted by the while line on the top of the valve stem.

53. This adjustment will be satisfactory for the vibrating magnet dashpot, however, the response of the generator or the character of the load changes on the system may be such that better operation will be obtained with another adjustment of the main control dashpot. Some generators are supplied with dampers such as solid pole shoes, others having short-circuited windings in the pole faces. If the generators are small and the damping is light, the needle valve opening would be about 8 to 12 turns; if the generators are large and the damping is heavy 4 to 8 turns only would be required. The proper adjustment of this dashpot, is to have the needle valve opening suit the largest or slowest responding alternating-current generator in the system.

54. Try free movement of lever system again by hand to see that dash pots do not bind.

55. Turn dial switch arms to extreme low position.

56. If all connections are properly made the regulator is now ready to put into service.

ADJUSTMENTS FOR 60-150 VOLT EXCITER SYSTEM

57. These regulators, when properly applied, are capable of complete automatic regulation of the voltage under any and all conditions of load, and to accomplish this, there must be proper adjustment of the exciter time constant which is obtained by the adjustment of exciter, generator and voltage limiting rheostat.

(a) **Ranges of Exciter Voltages**—Standard A-C. Regulators are provided with resistances suitable for operation on exciter voltages as follows:

60–150 volts for 125 volt exciter systems
120–300 " " 250 " " "

In addition to these standard ranges, there is furnished in special cases a resistance which will permit satisfactory operation of the relays over an exciter voltage range of 45-135 volts. Particulars on this system are given on page 22.

Where an especially broad range of exciter voltage is needed such as the excitation of a

synchronous condenser, a separate source of direct current is used to supply the relays, and the system is then known as the **Broad Range System.** Details of this system are given on page 15.

Adjustments of A-C. Generator Field Rheostats

58. These instructions are for the 60-150 volt range for 125 volt systems. The same procedure applies to the other voltage ranges except for the value of the settings.

The conditions assumed in making adjustments of standard regulators are:—

1. Generators similar as regards range of excitation required from no load to full load at rated power factor.
2. Range of excitation required is within the limits of 1 to 2½, and is within the voltages specified in Paragraph 57-a.

59. Adjustment of each unit:—

Each generator should be run at normal speed at no load.

1. Close alternating-current generator field switch (field resistance being all in).
2. Raise exciter voltage to 60 volts.
3. Adjust alternating-current generator field rheostat until normal alternating-current voltage is obtained, care being taken that exciter voltage is kept at 60 volts.

60. This is the proper position of the generator field rheostat when the regulator is in service and should be plainly marked on the front of switchboard.

61. If plant is in service and no spare buses are available the generator field can be connected to a spare exciter by jumpers on the front or rear of switchboard as convenient. See that the field discharge resistance is not in circuit, as it will become over heated.

62. When the alternating-current generators require different values of excitation voltage and exciters are operated in parallel at no load, all generator field rheostats should be adjusted to agree with the one requiring the highest no load excitation.

63. However, if the no load excitation of any one generator is so high that the range of the exciter system is exceeded when generators are operating at full load, complete automatic regulation will not be obtained. Full automatic regulation can then be obtained only by changing the characteristics of this generator by a change in the design, to obtain a lower no load excitation voltage.

64. Where the range of excitation required by an alternating-current generator from no load to full load exceeds the range of the exciter system, slight adjustment of alternating-current generator field rheostats under certain load conditions will give satisfactory automatic regulation over all other loads.

Exciter Adjustments

65. Satisfactory automatic voltage regulation is possible only when the exciters are adjusted to build their voltages up and down at approximately the same rates and to the same maximum and minimum values.

66. The following conditions are assumed:

(1) Exciters operate at constant speed from no load to full load.

(2) Exciters are of similar characteristics: i. e., will operate satisfactorily in parallel.

(3) Exciters capable of generating at least 15 volts more than alternating-current fields require at full load with alternating-current generator field rheostat at operating position.

(4) Proper main shunt field and voltage limiting rheostats are furnished for each exciter.

Adjust exciters as follows:

(1) Connect exciter to field of alternating-current generator which is to be excited. If no auxiliary buses are available use jumpers. See that field discharge resistance is out of circuit.

(2) Put alternating-current generator field rheostat in marked operating position.

(3) Adjust main shunt field and voltage limiting rheostat so that about one-half resistance of each is in circuit.

(4) Close the disconnecting switch at bottom of regulator controlling the exciter which is to be adjusted. All other switches on regulator to be open. This will cause exciter to build up under load to a value depending on **position of voltage limiting rheostat.** Allow time enough for exciter voltage to settle, observe value, then immediately open disconnecting switch on regulator.

If 250 volt exciters are used, the following voltages should be multiplied by 2. The time constant should be the same as for 125 volt machines.

If this exciter will not generate 150-volt

under load leave the voltage limiting rheostat all cutout, noting maximum.

If the observed steady value of voltage is not at least 135 volts, preferably 150 volts (for 125-volt exciter) adjust the voltage limiting rheostat, close regulator disconnecting switch and observe again. Repeat test until proper voltage is obtained.

(5) With regulator switches all open, turn main shunt field or regulating rheostat **in** until voltage drops to 25 volts or less.

(6) Close disconnecting switch on regulator and take time with a stop watch, for voltage to build from 30 to 125-volts (open disconnecting switch after voltage passes 125-volt mark).

The time required to build from 30 to 125 volts should not be greater than 5 seconds and preferably 3 seconds.

(7) Close disconnecting switch on regulator and allow voltage to build up above 125-volts, quickly open switch and take time required for voltage to drop from 125 to 30 volts. This time should be made equal or slightly less than the time required to build up over same range.

This is accomplished by adjusting the main shunt field or regulating rheostat. When the proper time constant has been obtained the position of the regulating or main shunt field rheostat should be plainly marked as this is the operating position when the regulator is in service. If more than one relay is required for the exciter the amount of resistance to be short circuited should be divided into the required number of equal sections and leads to the regulator connected permanently as shown on external diagram. Equal sections can readily be located by first taking the total volts drop across the resistance to be short circuited, then finding the studs which give ½, ⅓ or ¼ this drop, as the case may be. The voltage across the rheostat must remain constant while these points are being located.

When the rheostats are made up of two or more kinds of resistance elements, the section to be short-circuited as determined by the equal drop method may have different inductances and, therefore, will produce unequal sparking and wear of the relay contacts. In this case, the operation may be improved by readjustment of the taps on the rheostat to equalize the inductances as indicated by the sparking of the relay contacts.

(8) Repeat test for each exciter. In case any exciter will not develop a maximum voltage of 150-volts under load all exciters, if arranged for parallel operation, must be adjusted to the lowest maximum voltage obtained from any exciter.

67. An exciter which will not develop 135 volts under these test conditions will usually not be suitable for operation with standard regulator. (See paragraph 117.)

68. If the plant layout requires an exciter to furnish excitation for two or more generators, the above adjustments should be made, if possible, under its maximum operating load.

69. If the time constant of an exciter, as obtained above is greater than 6 seconds, satisfactory voltage regulation may not be obtained, especially if the load on the system fluctuates rapidly. Refer case to East Pittsburgh for data relative to improving the time constant.

70. Shunt wound exciters are preferable when used with voltage regulators, as the regulators, as the regulator then has full control over the machine. If compound exciters are used the series winding should be adjusted so that the machine is never more than flat compounded.

71. Where regulator is required to control interpole and non-interpole exciters operating in parallel difficulty is often encountered in obtaining satisfactory parallel operation.

72. Exciters controlled by a rheostat shunting type of voltage regulator are required to operate on a lower part of their saturation curve, than when operating under hand control, consequently any inherent instability in the exciter system may be increased when this type of regulator is applied.

73. When exciters having these widely different characteristics are required to operate in parallel on a regulator, the series winding of the compound wound interpole exciters should be entirely cut out of circuit, and replaced by an equal resistance having the same current carrying capacity. All exciters should then be adjusted for proper time constant, etc., as per instructions given for exciters having same characteristics.

74. If further difficulty is encountered in parallel operation, the matter should be referred to East Pittsburgh with full report of conditions.

PUTTING REGULATOR INTO SERVICE FOR FIRST TIME

75. Never put a regulator into service for the first time on a loaded system. A single generator and exciter should be obtained, independent of the remainder of the system, and operated at no load under the control of the regulator. If only one set of busses is available, it may be necessary to make temporary connections from the exciter to the generator fields, the D-C. circuit of the regulator and from the generator terminals to the voltage transformer for the regulator. The largest generator on the system should be used, since this is the slowest to respond to load changes and the most difficult to regulate. The regulator counterweight, dash-pots, levers, etc., can then be adjusted to obtain the best operating conditions before putting the regulator into service on the load. By turning the A-C. generator field rheostat slowly or rapidly, the exact load changes may be duplicated as far as the effect on the exciter and regulator is concerned.

76. Assuming the regulator to be in service on this unit, set the A-C. field rheostat at the predetermined no load position and note the A-C. voltage regulated. Slowly turn the A-C. field rheostat until the maximum excitation voltage, which will be required by the A-C. generator is obtained, and again note the A-C. voltage regulated. If there is an appreciable difference in the two observed values of the A-C. voltage, this would indicate that the main control magnet core is not properly set on the stem. If the A-C. voltage regulated is higher when the exciter voltage is high, the main control core should be raised slightly on the core stem and vice versa.

77. The top of the left end of the floating lever should not be more than $\frac{1}{16}''$ above the top of the centering post at the no load excitation, or more than $\frac{1}{16}''$ below at the maximum excitation.

78. When the regulator is cut out of service at the no load excitation of the A-C. generator, the stop screw should not strike the floating lever.

79. The relay contact should not arc over at the maximum excitation voltage.

80. The A-C. voltmeter should show no decided pulsations resulting from the vibrations of the relays of the regulator at the maximum excitation voltage required by the generator. The adjustment of the exciter, regulating and voltage limiting rheostats determine this point.

81. The proper dash pot settings can be found by quickly changing the position of the A-C. field rheostat from the no load position to a position, which will give the full load excitation voltage, or vice versa, and noting the time required for the A-C. voltmeter needle to become stable. After dash pot settings are found which permit the regulator to restore the voltage to normal in the shortest time, satisfactory operating settings when the regulator is in service on the load, should be one or two turns farther open.

82. If the A-C. field rheostat is motor operated, the quick change from the no load position to full load position can be obtained by temporarily shunting the proper amount of resistance with a single pole switch of sufficient size. The same effect can be closely approximated by opening the regulator disconnecting switch or switches across the exciter shunt field or regulating rheostat allowing the A-C. voltage to fall. When the A-C. voltmeter needle falls to 80 per cent of normal, quickly close the disconnecting switches, and note the time required for the voltage to become normal and steady. The exciter voltage should be 85 to 90 per cent of the maximum value required by the A-C. generator at full load when the latter method is used.

83. On large damped generators, the time required for the A-C. voltage to become normal and steady when the preceding tests are made, may be as great as 40 to 50 seconds, while on small generators it should only be 4 to 6 seconds, indicated on the standard switchboard type of voltmeter.

84. Assuming the system to be operating normally under hand control, and that the connections and adjustments, as previously given, have all been properly made:

85. The arms on the compensating dial switch of the regulator and on the line drop compensator, if any, should be turned to their low or minimum position.

86. The single-pole disconnecting switches, E and F shown in diagram should now be closed, and all the reversing switches thrown to one extreme position. With these switches closed, the control element and relay magnet

circuits would be energized. If the alternating-current voltage is normal, the main contacts can be made to vibrate by raising or lowering the main control magnet core or lever until the contacts just open or close. Once started these contacts, as well as the relay contacts should continue to vibrate for at least 10 seconds. If the contacts vibrate for a less time, the counterweight should be varied, until they have been made to vibrate for 10 seconds or more in this manner. The regulator can now be put into service as follows:

87. The voltage limiting rheostat of the operating exciter must be set at its predetermined marked position.

88. The alternating-current voltage should be normal.

89. The regulator contacts **must be open or vibrating.**

90. Close the disconnecting switch or switches at the bottom of the regulator corresponding to the operating exciter, then slowly turn the regulating rheostat in the exciter field circuit to the predetermined marked position. As this rheostat is turned in, the regulator will begin to vibrate, if not already vibrating and when the marked position has been reached the regulator will have full control of the exciter.

91. The alternating-current generator field rheostat or rheostats should now be turned to their operating positions.

92. The regulator will now be properly in service and the alternating-current voltage should become steady. It may be a little above or below the required value which can now be made correct by means of the counterweight. Increasing the counterweight will lower the voltage and vice versa. These counterweights are designed so that if care is taken, they can be varied while the regulator is in service, without appreciably disturbing the voltage. The bus-bar voltage will now be automatically maintained constant under all conditions of load, without any hand manipulation.

93. The position of the floating lever of the control element should now be checked. With the regulator in service and proper voltage being maintained, the floating lever should be in a horizontal position when the exciter voltage is 105 volts for 125-volt exciter system and 210 volts for 250-volt exciter systems. The alternating-current generator field rheostat or rheostats can be adjusted temporarily to obtain this value of exciter voltage and when obtained the lever can be made to assume a horizontal position, that is, the left end can be made to line up with the centering post immediately behind, by adjusting the spring attached to the bell crank lever. For a given voltage regulated, the adjustment of this spring and the position of the floating lever is dependent upon the amount of resistance short circuited in the regulating rheostat hence this adjustment cannot be made accurately until the regulator is in service.

Taking Regulator Out of Service

94. To take the regulator out of service when only one exciter is in use turn the regulating rheostat slowly in a direction to raise the voltage until the main and relay contacts become **permanently open.** This will be when the alternating-current voltage has risen slightly above normal, at which time the disconnecting switches, 1, 2, 3, etc., should be opened. The regulator now being out of service, the voltage can be regulated by hand.

95. If disconnecting switches E and F are opened there will be no energy on the regulator.

96. The regulator can be taken out of service when more than one exciter is in use as in preceding paragraph, excepting that there are now two or more rheostats to be slowly turned out together, in order to prevent excessive change of load on the exciters.

Paralleling Exciters.

97. The Westinghouse method of putting an exciter on the bus is fundamentally different from that previously used. With this method, the sequence of operations is perfectly smooth, each step being taken with ease and deliberation, **there being no danger of violent current interchanges at any stage.**

For the accomplishment of this method, it is necessary to have a voltage limiting rheostat for **each exciter.** This rheostat should have sufficient resistance for complete hand control of the exciter. (For single units, this rheostat may sometimes be omitted).

With the regulator in service on a generator and exciter the sequence of operation for paralleling another exciter is as follows:—

98. For the incoming exciter, the field rheostat for same should be turned to its

marked position, and the voltage limiting rheostat turned "all in." Now close the rheostat shunt circuit switch or switches on the regulator corresponding to this exciter **which puts the regulator into service on the exciter before it is put in parallel with the other.** When the shunting switches are closed, the voltage on the incoming exciter will rise to some extent, depending on the position of the voltage limiting rheostat. This rheostat should now be varied to make the voltage of this exciter equal to the voltage of the operating exciter, or bus, and when the two have been made equal, the exciter main switch can be closed. The exciters are now in parallel and perfectly stable, there being no tendency for the incoming machine to grab load or to surge. The condition of the machine is the same as in paralleling a machine under hand control. If the machines are shunt wound, as is usually the case, the incoming machine will not pick up load until the rheostat adjustment is changed. If the machines are compound wound, the incoming exciter will pick up a certain amount of the load the instant the main switch is closed, just as it does under hand control. The proper load can now be taken on this exciter by adjusting its voltage limiting rheostat. This rheostat may not be in its marked position when the loads are equalized. However, one of the voltage limiting rheostats should always be at its marked position, while the others may vary slightly for the correct division of the load.

99. Disconnecting an Exciter—When two or more exciters are in service on the regulator, to disconnect one, the load should first be reduced to a low value by turning in the voltage limiting rheostat of that exciter, after which open the main switch to the exciter bus-bars. Then open the disconnecting switches on the regulator corresponding to this exciter.

Paralleling A-C. Generators

100. The paralleling of alternating-current generators with exciters in parallel should be done in the usual way. Immediately after paralleling an alternating-current generator, its field rheostat should be slowly turned to the marked or "all out" position as the case requires, and the load properly proportioned on the generators by varying the speed of the prime movers; the generator field rheostats should all be kept at their marked, or "all out" positions, when the generators are inherently alike. However, if they are materially different inherently, so as to produce excessive wattless current between the generators, then one or more of the generator field rheostats, as required, may be turned **out** beyond the marked position, to reduce this wattless current

101. These rheostats should not be turned **in** beyond their determined positions. This will increase the resistance in the generator field circuit, and will demand a higher exciter voltage. Usually the generators are near enough alike inherently so that when the load is properly adjusted by the speed of the prime movers the wattless current will not be excessive between generators, with the field rheostats left in their predetermined positions, as required by the various ranges of exciter voltage.

Regulators For Use With Exciters Not Arranged For Parallel Operation

102. If a storage battery or other constant potential direct-current source is available, the standard regulator may be used by energizing the relay circuit from this source.

103. If no constant potential source is available and the range of excitation required by the alternating-current generators is 1 to 2½ or 60 to 150 volts on 125-volt exciters, a regulator having transfer switches should be used. These regulators are the same as those used for systems having exciters operating in parallel except that transfer switches are provided for the purpose of transferring the energy from any exciter to the relay circuit of the regulator.

104. There are from two to five quick-throw transfer switches at the bottom of the regulator, numbered consecutively.

105. The wiring of these switches is such that if the relay circuit is to be energized from the exciter connected to No. 1 transfer switch, all the other switches must be thrown **down,** and No. 1 thrown to its **up** position. Before transferring the relay circuit from one exciter to another, the alternating-current generators should be paralleled and their field rheostats properly set.

106. If it should now be desired to transfer the relay circuit to the exciter connected to No. 2 transfer switch, this would be obtained by throwing No. 2 quickly to its **up** position, after which switch No. 1 should be thrown

down. See diagram of connections furnished with regulator.

107. For simplification, these switches should be kept in their downward position, except the switch corresponding to the exciter from which the relays are being energized, which should be thrown up.

Putting Regulator Into and Out of Service with Exciters Not Arranged For Parallel Operation

108. If only one generator and exciter is to be used, the regulator can be handled according to instructions given for exciters operating in parallel.

109. The transfer switches should be in proper position to energize the relay circuit from the exciter which is to be used.

110. A second unit may be put into service on the regulator as follows:

111. With the regulator properly in service, as above, on one generator and exciter, the generator to be paralleled should first have its field rheostat, if any, turned to the "all out" or marked position, as required for the range of exciter voltage. Then, the exciter for this set should have its voltage limiting rheostat turned "all in" and the field rheostat turned to its marked position. The single-pole disconnecting switch or switches at the bottom of the regulator 1, 2, 3 etc., as required for this exciter, should be closed. The regulator would now be intermittently shunting the exciter field rheostat of the incoming unit; the alternating-current voltage of this generator can now readily be made equal to the voltage of the operating unit, by varying the voltage limiting rheostat in its exciter field circuit.

112. When the voltage is made correct in this way, the generator can be synchronized, as usual, after which the voltage limiting rheostat should be slowly turned to its marked position and the load properly divided, as usual, by the speed of the prime movers. The regulator is now properly in service and if the correct adjustments have all been made, the exciter voltages should be at their correct values and there should be no wattless current between the alternating-current generators, provided they are inherently alike. Should they be materially different, and there is excessive wattless current between the generators, this can be reduced by varying the voltage limiting rheostat or rheostats, as the case may be, one of these rheostats, however, always being at its marked position.

113. In order to keep the voltage of all exciters as low as possible, turn the voltage limiting rheostats **out** instead of **in** when eliminating wattless currents. If there is an appreciable difference in voltage of the exciters, the relays should be energized through the transfer switch from the exciter having its voltage within the range of 1 to $2\frac{1}{2}$.

114. When two units are operating and it is desired to take one out of service, this may be done as follows:

115. The relay circuit must be energized from exciter which is to remain in service.

116. To take one generator out of service, reduce the load on the alternating-current generator to a low value, by the speed of the prime movers, and reduce the wattless current to a minimum by means of the voltage limiting rheostat, after which the main generator switch can be opened. If voltage limiting rheostats having sufficient resistance have been supplied, it will never be necessary to manipulate the exciter or generator field rheostats.

ADJUSTMENTS FOR 45-135 VOLT EXCITER SYSTEMS

117. It sometimes happens that the exciter will not generate sufficient voltage under full load if the 60-150 volt system is used. For example, a generator may require a drop of 40 volts across its field at no load and 100 volts at full load to maintain constant bus voltage. At no load, a rheostat would be required in the generator field to absorb the 20 volts drop between the exciter bus and the generator field. At full load, therefore, the necessary steady exciter voltage would be 150 and the exciter would have to be capable of delivering 160 volts to maintain a vibrating condition of the contacts. Some exciters are incapable of delivering this voltage under load and in such cases, the 45-135 volt system is specified. The generator field rheostat can be set so that the minimum exciter voltage is 45, and in this particular case, the maximum voltage the exciter would be called upon to deliver would be 112 + 10 or 122 volts to maintain the contacts in a vibrating state.

Advantage is sometimes taken of the increased range of this system. Even though the exciter will deliver the necessary voltage

for the use of the 60-150 volt system, the generator may require more than a 2½ to 1 range. The 45-135 volt range is readily applicable to this field.

118. Adjustment of 45-135 Volt Systems—The adjustment of this system is similar to that given on page 9 for the 60-150 volt range except that the generator field rheostat is placed in such a position that the minimum exciter voltage is, if possible, 45 volts for rated generator voltage at no load. If the generator field requires more than 45 volts at no load, the generator rheostat should be left entirely out and the minimum exciter voltage possible obtained. The balancing point of relay on the 45-135 volt system is 35 volts.

ADJUSTMENTS FOR BROAD RANGE EXCITER SYSTEMS

119. When the relay circuits of these regulators are connected to some **constant potential direct-current source,** such as a storage battery or small motor generator set, the regulators are independent of the exciter system, since both magnets of the control element are energized from a voltage transformer on the alternating-current bus.

120. This arrangement permits the application of regulators to synchronous condensers or generators where the range of excitation required is greater than 1 to 2½, that is, less than 60 volts at no load and greater than 150 volts at maximum load. The design of the relays are such that these limits cannot be safely exceeded when they are energized from the exciter system.

121. Regulators so applied will control the system over a range of exciter voltage from residual to maximum with a standard compound wound exciter.

122. Shunt wound non-interpole machines will reverse their polarity when dropping quickly from normal to a low voltage under the inductive load of the alternating-current fields. Compound wound or shunt wound interpole machines will not reverse polarity provided brushes are properly set.

Adjustment of Compound-Wound Exciters

123. With the exciter running at normal speed and no load, and having the voltage limiting rheostat turned to its "all out"' position, bring the exciter voltage to normal by the field rheostat, after which slowly turn this rheostat **in** until the exciter voltage falls to about 10 volts. Temporarily mark the rheostat and leave at this position. Then the compound winding should be disconnected, and the inductive load of alternating-current field, put on the exciter. Be sure the generator field rheostat is turned to its "all out" position. Then close the switches on regulator across the exciter field or regulating rheostat, and allow the voltage to rise to about 15 volts above the rated voltage or to 140 volts on 125-volt exciters, at which time quickly open the switch. With this inductive load on the exciter, its voltage will drop so quickly that the polarity will be reversed, and it will build up in the opposite direction. This being the case, the exciter should be reversed to its original polarity by means of the switch, as before.

124. After the above conditions have been determined the compound winding should again be connected into circuit, and a temporary shunt placed across its terminals which should have practically a capacity equal to the output of the exciter, and its resistance should be very low so it would carry nearly the total current, leaving after a small portion to pass through the compound winding. After this shunt has been attached, another test should be made of the exciter, as before. Should the exciter again reverse its polarity, the resistance of the shunt across the compound winding should be increased slightly, and these tests repeated until a point is found where the exciter will not reverse its polarity under load, as above when falling from the normal rated voltage to residual voltage in about 8 seconds; that is, the exciter should not reverse, yet the effect of the compound winding should not hold the voltage up with this inductive load to more than residual. After these adjustments have been carefully made with a temporary shunt across the compound winding, this shunt should now be made permanent, and the adjustment checked. Then the regulating rheostat should be marked as its operating position.

125. When the above adjustments have been carefully made, it will be found that the time constants are about equal on all exciters, and they will build up from 25 volts to their normal rated voltage under load and vice versa in about 5 seconds. The time might be a second shorter on small exciters, or a second higher on large exciters.

126. After all the exciters have been adjusted, as above, the voltage limiting rheostats should be adjusted for the maximum exciter voltage in every way, as previously indicated in paragraph 66.

ACCESSORIES FOR REGULATORS

Voltage Adjusting Rheostat

127. A voltage adjusting rheostat is sometimes used for the fine adjustment of voltage instead of varying the counterweight. This rheostat has a sufficient resistance to give an adjustment of about 6 volts either way from the normal voltage when properly applied. In special cases a rheostat having a range of 15 volts either way can be supplied.

128. The correct place to insert this box is given on the diagram furnished with rheostat.

129. The connections of voltage transformers to the external resistance box and note pertaining thereto shown on the internal diagram of the regulator is based on not using the voltage adjusting rheostat. Therefore, if this rheostat is used and the table indicates that one lead of the voltage transformer should be connected to terminal I of the external resistance box, this lead should then be connected to terminal 2, or if the table indicates that connection should be made at terminal 2, it should be connected to 3. If the rheostat is first set at its middle position it would give the correct external resistance as before, and would provide for an equal adjustment of voltage, either side of normal. After this rheostat has been set, and the connections made, as above, the voltage should be adjusted to approximately its required value by means of the counterweight. The rheostat setting can then be varied to give the correct alternating-current voltage which is equivalent to making the final adjustment by the counterweight, and when once adjusted, no further attention will be required, in order to automatically maintain constant alternating-current voltage.

Method of Line Drop Compensation

130. There are several methods of compensating for line drop as given below:

131. For complete line drop compensation it is necessary to consider two factors, namely, inductive drop and ohmic drop in the line and transformers between the generator bus and the distributing center.

132. The principle by which this is accomplished is clear from the vector diagram of line drop, Fig. 6, in which E_1 is the generator or station voltage; E_2 the terminal voltage, RI is the ohmic drop of the line and XI the inductive drop. If the regulator could be supplied by pilot wires running back from the end of the line, it would receive the voltage E_2 and could adjust the excitation of the generators to maintain E_2 constant. Since it is rarely practical to run pilot wires, the regulator potential winding is energized from the generator bus voltage, that is, by E_1, and the two components, XI and RI, are subtracted from it artificially by the compensation so as to supply the regulator with a resultant voltage E_2. The regulator, therefore, acts precisely as if it were energized from pilot wires at the end of the transmission line, provided the components, RI and XI are actually proportional to and in phase with the corresponding values in the line.

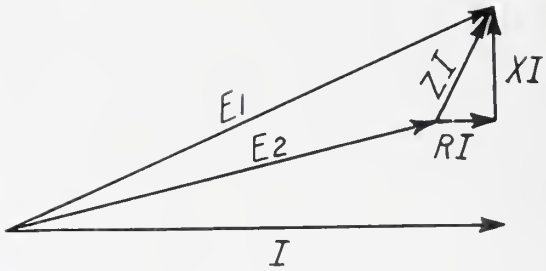

Fig. 6

133. The method of deriving the RI and XI components of line drop is indicated in the schematic diagram Fig. 7-(a) which shows the main control magnet of the regulator energized by the potential across the two outside lines of the three phase circuit, and also by the currents derived from two series transformers also in the outside legs, and connected in vector parallel. The ohmic RI component of line drop is compensated for by passing this resultant current thru the series winding on the regulator main control magnet, while the inductive component XI is compensated for by means of the external inductive compensator L which introduces a voltage directly in the potential circuit of the regulator. The action of the compensator may be understood from consideration of the vector diagrams in Fig. 7. The triangle of voltages is shown at 1-2-3 Fig. 7 (b). The current in leg 1 is shown at I_1 and the current in leg 3 at I_3. These are the

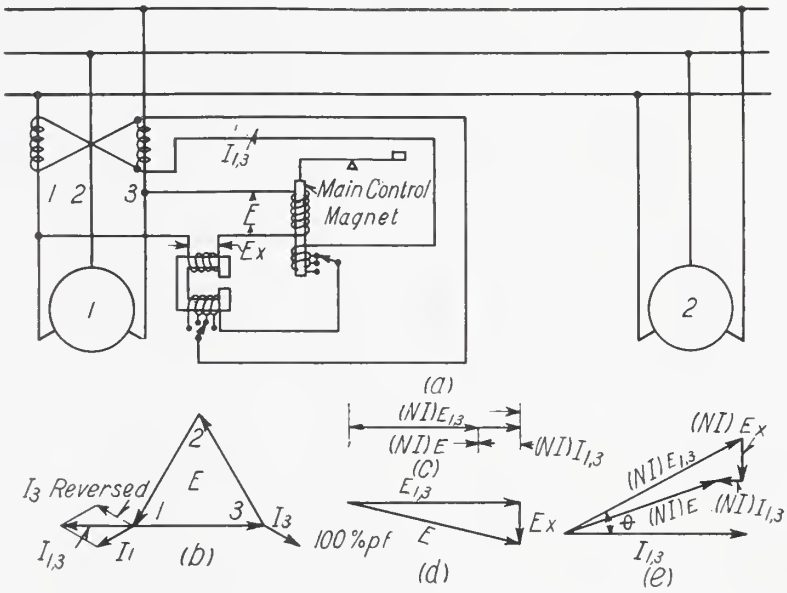

Fig. 7

series transformer currents, at 100% power factor, balanced load. Series transformer No. 3 has its leads reversed which produces the resultant current $I_{1,3}$ which is seen to be in phase with the line voltage across the phase 1-3. This resultant current is now suitable for use in compensating devices, since the phase angle between it and the voltage across the phase 1-3 varies exactly with the power factor of the three phase load, that is, at 100% power factor, this resultant current $I_{1,3}$ is exactly in phase with the line voltage $E_{1,3}$ and at zero power factor it is exactly at right angles to $E_{1,3}$. The passage of this current through the series winding on the regulator will produce a change in the regulated voltage in phase with the load current, and therefore, represents the RI drop of the equivalent single phase line.

This is illustrated in Fig. 7(c). It is assumed for the moment that the inductive compensator of Fig. 7 (a) is not connected in the circuit. At unity power factor, $(NI)_{E_{1,3}}$ represents the ampere turns produced in the voltage winding of the regulator due to the line voltage across phases 1, 3. $(NI)_{I_{1,3}}$ represents the ampere turns produced in the series winding of the regulator due to the current transformers. The vector sum of these quantities, gives $(NI)_E$ the ampere turns for which, the regulator core is balanced. If the line, therefore, was entirely non-inductive, at 100% power factor, $(NI)_E$ would be proportional to the voltage at the receiving end of the line, $(NI)_{I_{1,3}}$ would be proportional to the line drop and $(NI)_{E_{1,3}}$ would be proportional to the station bus voltage.

By properly adjusting the strength of this series winding, the effect on the regulator may be made exactly as though it were affected by the RI drop of the transmission line, represented as RI in Fig. 6. The polarity of this series winding must be such that outgoing power has the effect of raising the regulated voltage. This is the case when it opposes the potential winding, since any increase in excitation of the series winding compels the line voltage to rise by an amount sufficient to maintain a constant pull on the main control magnet.

The inductive compensator L consists of a small transformer with an air gap in its magnetic circuit, the primary of which is adjustable, and is energized by the current $I_{1,3}$ from the cross connected series transformers. The current $I_{1,3}$ produces a flux in the iron in phase with it, owing to the large air gap. This flux cutting through the secondary coil induces a voltage in that coil at right angles to the current $I_{1,3}$. This voltage is introduced directly in the potential circuit of the regulator, and since it is at right angles to the line current it may be made to exactly represent the XI drop of the transmission line which is also at right

angles with the line current. By properly adjusting the dial setting of the primary, this compensator will alter the regulated voltage precisely as though it were affected by the actual inductive drop of the line, as represented by XI, Fig. 6.

The way in which this is accomplished can be better understood by consideration of Fig. 7(d). For the sake of clearness, it will be assumed that the series winding of the regulator is not connected in the circuit. $E_{1\cdot3}$ represents the bus voltage to which must be added vectorially Ex the voltage introduced by the secondary of the compensator, giving the resultant E, which is the voltage for which the core of the regulator is balanced. The complete diagram showing complete ohmic and inductive compensation at some phase angle is given in Fig. 7(e). The vector sum of $(NI)_{E_{1\cdot3}}$ and $(NI)_{EX}$ represent the number of ampere turns on the main control magnet due to the bus voltage $E_{1\cdot3}$ and the compensator voltage, Ex. $(NI)_{I_{1\cdot3}}$ represents the number of ampere turns due to the series winding. The vector sum of these quantities gives $(NI)_E$ the number of ampere turns for which the core is balaneed. The similarity of this diagram to Fig. 6 will be immediately apparent and it can easily be seen how the external compensator in conjunction with the series winding compensate for the entire line drop. Thus the main potential winding of the regulator is supplied with the generator bus voltage $E_{1\cdot3}$ from which is subtracted the equivalent XI RI drops of the transmission line. The regulator is therefore energized with the voltage E which is the same as that which the regulator would get if it were connected to the receiving end of the line.

The Westinghouse Regulator has two A-C. control magnets each of which plays an important part in the regulation. It is therefore, necessary to compensate each magnet so that the actual wiring diagrams show the compensating connections to both magnets. The inductive compensator has one primary, but two secondaries, one for each control magnet. The compensating windings on the regulator are in series and simultaneously adjusted by means of the dial switch.

134. Figures 8, 9 and 10 show the connections to single, two and three phase systems.

135. To obtain complete line drop compensation it is necessary to adjust both com-

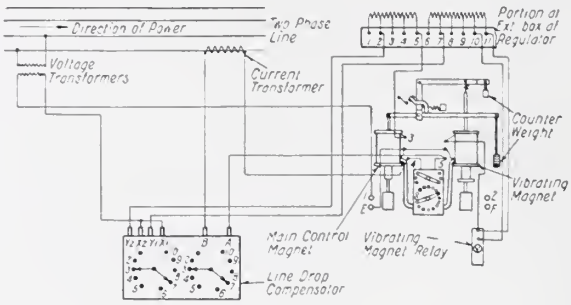

The above connections are correct for a secondary operating voltage of 110 Volts. If a different operating voltage is required, refer to the internal diagram of connections of the regulator for the proper connections to the external resistor.

Fig. 8—Connection of External Compensator for Single or Two Phase Systems

pensating devices to agree with the line characteristics.

136. Where ohmic line drop compensation only is desired no external compensator is required. The current windings on the regulator coils, when properly energized from series transformers accomplish this result. For three phase systems, two cross connected current transformers are required and the connections are shown in Figure 11. The

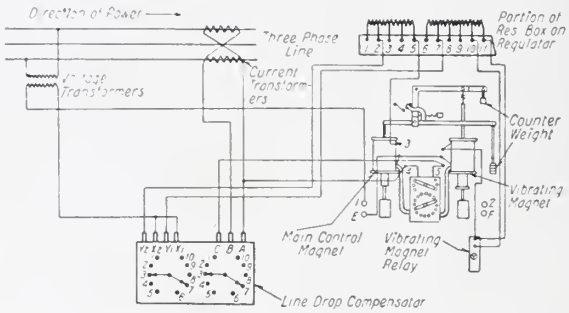

The above connections are correct for a secondary operating voltage of 110 Volts. If a different operating voltage is required, refer to the internal diagram of connections of the regulator for the proper connections to the external resistor.

Fig. 9—Connection of External Compensation For Three-Phase System

current transformers must be in the same legs of the circuit as those to which the voltage transformer is connected in order that the resultant current will be in phase with the voltage at 100 percent power factor.

137. In single or two-phase systems this result may be obtained by energizing the current windings of the regulator coils from one current transformer connected in one of the legs to which the voltage transformer is connected.

138. Partial compensation may be obtained on three-phase systems by energizing the current windings of the regulator coils from

a single current transformer connected in one of the legs to which the voltage transformer is connected. With this method, the current from the current transformer is 30 degrees out of phase with the voltage and will therefore not give as accurate results as when two current transformers are used. The method is also indicated in Fig. 11.

Adjustments for Line Drop Compensation

139. It is essential while adjusting for any of these methods to have the bus voltmeter connected to the same phase as the voltage transformer for the regulator.

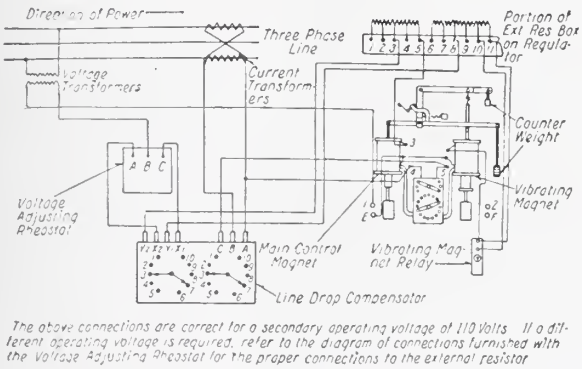

Fig. 10—Connection of External Compensation for Three-Phase When Voltage Adjusting Rheostat is Used

140. The current transformers for any method should be located in the system so that only the current in the feeder to be compensated for will pass through the same.

141. Care should be taken not to leave any one arm of the dial switches of either compensating device in contact with more than one button.

142. **Complete Compensation**—For long transmission lines, or in cases where power factor fluctuations are appreciable, the most satisfactory method is to compensate for both the inductive and ohmic drop, involving (as indicated above) the use of the external compensator and the current windings on the regulator.

143. The correct connections to the regulator, and compensator for single or two-phase systems are shown in Fig. 8 and for three phase system in Fig. 9.

144. When a Voltage Adjusting Rheostat is used in conjunction with either compensator the connections are as given in Fig. 8.

145. The connections shown in the above figures indicate the proper phase relation to obtain an increase in bus voltage as the load increases.

146. The correctness of the connections to the compensator should be checked before the compensator is put into service. With the regulator out of service, but with the control element energized by closing switches E and F, and all compensating dial arms set for zero compensation, that is, extreme low position, adjust the counterweight and control spring so that the regulator vibrates at the existing bus voltage with the floating lever approximately horizontal.

147. Then, with load on the feeder to be compensated, and the regulator vibrating, move both sets of dial arms on the external compensator towards the **high** position and to corresponding settings. If the main control core drops down and the main contacts close, the compensator connections are correct and will rise with an increase of load when the regulator is in service. If the main control magnet core rises and the main contacts become permanently open, the connections are incorrect and the leads A and B on the external compensator should be reversed and the above test repeated.

148. For a three phase compensator, care should be taken to have the regulator terminals 4 and 5 connected across the external compensator terminals A and C respectively. This precaution is necessary because the three phase compensator contains an auto-transformer connected across terminals A and C to secure 4 amperes in the regulator coils when the current transformer secondaries carry 4 amperes each.

149. The connections to the ohmic part of the compensator should be checked in a similar way. The external inductive compensator dial arms should be set back to the zero position and with the regulator vibrating as before, move the regulator dial switch arms towards the **high** position. If the main control core rises and the main contacts become permanently open, the ohmic compensator circuit is reversed. Leads to terminals 4 and 5 on the regulator should then be reversed and the test repeated.

Settings of Compensator Dials

150. To set the compensator dials, estimate from line data the percentage ohmic and inductive drop from the station bus to the distributing center at a load which will give 4 amperes in the secondary of each current transformer. Select from the tables, dial settings which correspond to the estimated percentage drop and adjust ohmic and inductive dial arms accordingly.

Table of Dial Settings for Ohmic Compensation

Dial Setting	Per Cent Compensation
1 and 4	0
1 and 5	1.25
1 and 6	2.50
1 and 7	3.75
1 and 8	5.
1 and 9	6.25
1 and 10	7.50
1 and 11	8.75
2 and 4	8.0
3 and 4	16.0
3 and 11	24.75

This table is based on 4 amperes secondary current from each current transformer and applies to single phase, two phase or three phase systems when used with the external compensator.

Table of Dial Settings for Inductive Line Drop Compensation

	Per Cent Compensation		
Switch Points	Compensator	Compensator	Compensator
5–6	0	0	0
4–6	.5	.75	1.0
3–6	1.0	1.5	2.0
2–6	1.5	2.25	3.0
1–6	2.0	3.0	4.
5–7	2.5	3.75	5.
4–7	3.0	4.50	6.
3–7	3.5	5.25	7.
2–7	4.0	6.00	8.
1–7	4.5	6.75	9.
5–8	5.0	7.50	10.
4–8	5.5	8.25	11.
3–8	6.0	9.0	12.
2–8	6.5	9.75	13.
1–8	7.0	10.50	14.
5–9	7.5	11.25	15.
4–9	8.0	12.00	16.
3–9	8.5	12.75	17.
2–9	9.0	13.50	18.
1–9	9.5	14.25	19.
5–10	10.0	15.00	20.
4–10	10.5	15.75	21.
3–10	11.0	16.50	22.
2–10	11.5	17.25	23.
1–10	12.0	18.00	24.

This table is based on 4 amperes in the secondary of each current transformer, whether for single phase, two phase or three phase systems, and applies only to the external compensator.

Both sets of dials arms must be set for the same values.

151. With the station voltage at a value giving desired voltage at the distributing center for the existing load, balance the control element for this voltage and dial setting, the regulator being out of service. This balance is obtained by adjusting the counter-weight and control spring so that the regulator will vibrate and the floating lever remain approximately horizontal. If a voltage adjusting rheostat is used, it should be set in its mid position.

152. The regulator is now ready to be put into service. This should be done in the usual way.

153. Observations of the voltage at the distributing center should be made during load variations with the regulator in service. If the voltage at the receiving end of the line or distributing center is not constant, further adjustment of the compensator should be made.

154. The determination of the inductive component of the line drop is usually more difficult than the ohmic component, and since the inductive component is usually the larger, the final adjustment will be reached more readily by changing the dial settings of the external compensator.

155. When the correct compensation has been obtained, the voltage at the distributing center will remain constant under all load conditions and no further adjustment of any of the dial arms should be made.

156. Should the operating conditions at any time require a different voltage than that for which the regulator and compensator are set the change should be made by varying the voltage adjusting rheostat or adjustable counterweight on the regulator.

157. Ohmic Compensation—Ohmic compensation is obtained by using only the current windings on the regulator, connections being made as shown in Figure 11. This shows the main control magnets of the regulator which have potential windings and compensating windings. The compensating windings are divided into sections and connected as shown, the fine adjustments being obtained by the lower arm of the dial switch, and the coarse adjustments by the upper arm. One step of the upper arm, between buttons *1* and *2*, is equivalent to the full movement of the lower from buttons *4* to *11*.

158. With the connections as shown in Figure 11 and 4 amperes in the secondary of each current transformer, there will be a total of 4 x $\sqrt{3}$ or approximately 7 amperes in the

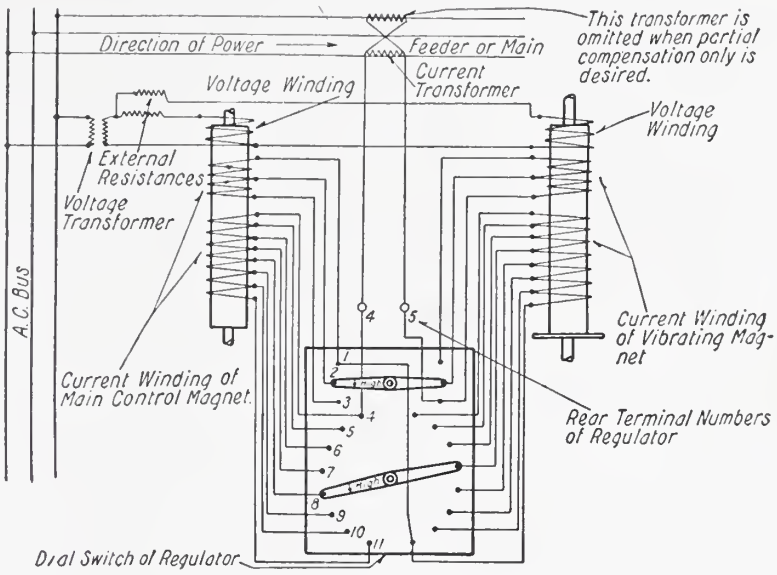

Fig. 11—Connection of Control Element

regulator compensating coils. Hence, the values given in the table above for ohmic compensation should be increased by the ratio of 7 to 4, since the table is based on 4 amperes in the regulator winding.

159. Partial Compensation—Partial compensation on a three phase system is obtained by using one current transformer as indicated in Figure 11.

160. With this method, it is essential in multi-phase systems to have the current transformer connected in one lead of the phase to which the voltage transformer for the regulator is connected, as shown, in order to get the proper phase relation between these transformers. It is evident that if the current transformer is connected to the opposite phase in either two or three-phase systems, the current of the two transformers would now be in quadrature and no compensating effect would be obtainable, except to the extent that the current was leading or lagging. Since the load current is 30 degrees out of phase with the voltage, the ohmic compensation obtained will be only 86 per cent of that given in "Table of Dial Settings for Ohmic Compensation."

Volt Ampere Capacity of Current Transformers

161. The following table gives the total volt ampere capacity required by the different size compensators. This data is based on a full load secondary current of 4 amperes from current transformers.

Compensator	System	Approx. Volt. Amp.
12%	Three phase—25 or 60 Cycles	86
	Single or two phase—25 or 60 cycles	148
18%	Three phase—25 or 60 cycles	129
	Single or two phase—25 or 60 cycles	222
24%	Three phase—25 or 60 cycles	172
	Single or two phase—25 or 60 cycles	296

COMPLETE INTERNAL ADJUSTMENTS OF REGULATOR

162. Control Element—The control element is shown in Fig. 12. It will be seen that this control element is of the unit design having its complete parts assembled on a cast base *39*. The main control magnet is shown at *40*, and and the dial switch for one arrangement of line drop compensation, shown at *41*, is mounted between the dashpots. The vibrating magnet is shown at *16*. The adjustments of same are as follows:

163. Adjustment of Pivots and Levers—The pivot sockets *1* and *2* are adjusted to give a slight amount of end play to the pivot *3*. To make sure that the play is in the pivot and sockets instead of being in the pivot *3* and lever *4*, the set-screw *5* should be securely tightened. This would give all the freedom left in the lever to the pivot and sockets. These should have a slight amount of end play, after set screws holding the sockets *1* and *2* are securely

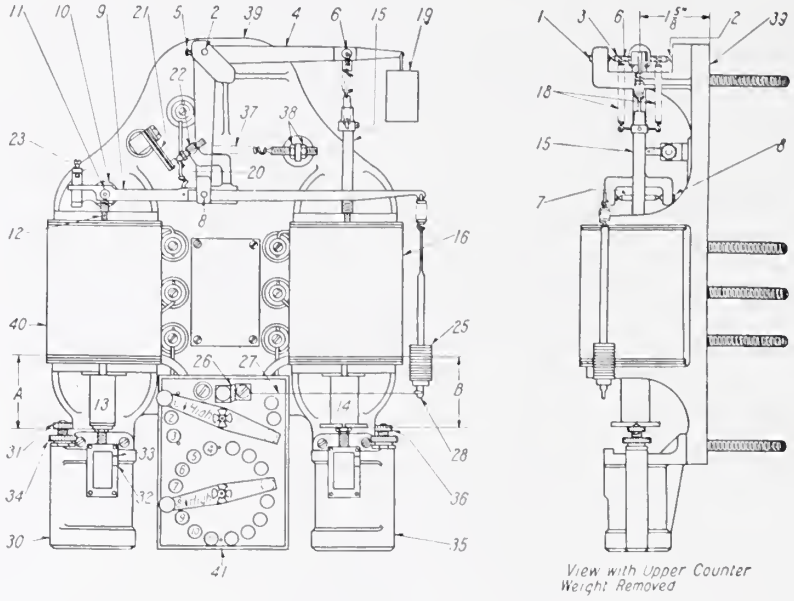

Fig. 12—Main Control Element

tightened. The bell crank lever *4* should be adjusted on the pivot *3* until the center of the slot to which the core stem is attached, is made $1\frac{5}{8}$ inches from the panel to the center of the slot, when the set screw *5* is securely tightened. After this, the pivot *7* and sockets *8* should be adjusted the same as above, to have a slight amount of end play. The lever *9* should be adjusted on the pivot until the center of the slot is $1\frac{5}{8}$ inches to the face of the pane. This should then give a clearance of $\frac{1}{16}$ inch between lever *9* and centering post *10*.

164. Adjustment of Cores and Stems—After the above adjustments have been made, the centering pin *11* should be inserted to hold the levers *9* and *4* and core stem *12* in position, as shown. It will be noted that this centering pin *11* has a collar near one end. The long end is to pass through the lever *9* into the centering post *10*, to hold the levers in a fixed position while the necessary adjustments are being made. It will also be noted that the short end of this centering pin *11* is long enough to just pass through the lever *9*. This is the end to be inserted when the regulator is in service.

165. With the centering pin in place as above, the core *13* should first be adjusted so that the dimension A will be $1\frac{3}{4}$ inches for 60 cycle systems and $1\frac{5}{8}$ for 25 cycles systems. Core *14* should be adjusted so that with the stem *15* in place, as shown, the dimension B should be $1\frac{5}{8}$ inches for all frequencies.

166. After the cores have been adjusted as above, a test should be made to see if the core stems *12* and *15* are practically straight so there will be no possibility of the cores 13 and 14 binding in their respective magnets. This can best be done as follows:—

167. First, remove the core stems *12* and *15*, and replace pin *11* for centering levers as shown. Then hold the core to be adjusted in its normal position with the top of the stem immediately under the lever and move it four ways past the supporting pin; after which, turn the core 90 degrees and repeat the above. If the stem is straight there will be equal travel each side of the centering pin or slot in the levers. Place core stems *12* and *15* in position and hook side springs *18* over ends of pin *6* as shown. Side springs *18* should both be in position on pin *6* when the regulator is operating.

168. Adjustment of Main Contacts and Stops—While making these adjustments, pin *11* should be inserted to hold the levers and cores secure in their central positions as shown.

169. To make these adjustments properly, it is necessary to have the direct-current circuit closed, energizing the relays. The voltage of this circuit should not be less than 60 volts for 125-volt exciters and not less than 120 volts for 250-volt exciters. With this circuit

completed, by closing the single-pole disconnecting switch at F and throwing the reversing switch M to an extreme position, up or down, the main contacts 20 and 21 should be adjusted centrally and so as to **just make and break the circuit, causing the relay contacts to open and close by just the slightest touch of the lever system.** This vibration should be obtained after the set screw *22* has been tightened and both contacts made secure. The stop screw *23* should now be adjusted so that there is about ¼ inch clearance between the screw and lever when centering pin *11* is in place.

170. After the main contacts *20* and *21* have been in service about one year, they should be removed and smoothed off. If a cavity is found in contact *21*, this should be removed by stoning or grinding, care being taken not to grind any below the cavity. Contact *20* being ball shaped, can be smoothed by using a clean stone and its shape retained. If proper care is taken in stoning or grinding, these contacts should last several years.

171. Never use main contacts other than those furnished by this Company.

172. Adjustment of Counterweight—The counterweight *25* is attached to the lever *9* by the spring as shown. To prevent swinging of this counterweight in a direction with the movement of the levers, same is guided by a thread *27*. While the centering pin *11* is still in position, locking the levers, the guide thread *27* should be tightened by the adjusting stem *26*, until the bottom end of the counterweight stem *28* is drawn out of its vertical position about $\frac{1}{16}$ inch toward the guide support. The adjusting stem *26* should be made secure in this position. These adjustments should be made after attaching part of the counterweights *25* and six of the $\frac{1}{16}$ inch thick weights should be used. This amount of counterweight should be nearly correct, if the proper connections have been made to the voltage transformer and external resistance box of the regulator. Counterweight *19* should be hooked into the eye in lever *4*.

173. If, after putting the regulator into service, and the generator exciter field and voltage limiting rheostats are all turned to their predetermined marked positions, the alternating-current voltage is not at its desired value, it can be made so by increasing or decreasing the amount of counterweight. Adding counterweight lowers the voltage. The $\frac{1}{16}$ inch weights vary the voltage about ¼ volt and should be used for the fine adjustments, unless a voltage adjusting rheostat is furnished.

174. Adjustment of Dashpots—The dashpots should be removed and thoroughly cleaned. They are both marked on the machined surfaces that fit to the base, giving the exact diameter of bore.

175. The main control magnet dashpot 30 nominally has a 1⅛ inch bore, but it may vary a thousandth of an inch over or under. If, for example, it was one-thousandth inch over, it would be stamped 1.125 W .001. The plunger will have a clearance of nine thousandths inches and will also be stamped, giving its exact size. Pure distilled water only to be used in this dashport.

176. The adjustment for water in the dashpot is as follows: The needle valve *31* should be opened several turns, and the chamber then filled within about ¼ inch of the graduation *32* with distilled water. After wiping off the plunger on the end of the core stem, place the dashpot back in position and securely tighten same. The water level should now be brought to the first graduation *32* by means of a fountain pen filler, after which fill the cup from the lower graduation *32* to the upper graduation *33* with the oil furnished with the regulator, using the filler as before. This oil is to form a seal to prevent the evaporation of the water. The needle valve *31* should now be turned down firmly to its seat and then opened eight full turns, (the top of this needle valve has a graduation for this purpose), after which make it secure by jam nut *34*.

177. The vibrating magnet dashpot *35* is also designed for distilled water on account of it being very sensitive and thus requiring a liquid having a constant viscosity. Dashpot *35* should be filled with water and sealed with oil in the same manner as dashpot *30* and the needle valve *36* should also be given an opening of eight full turns. If the exciters used in connection with the regulator are small and respond very quickly, the dashpots may be opened two or three turns more, or if they are large and respond very slowly, they might be closed down two to three turns. This dashpot has a nominal bore of 1⅛ inch and the plunger has a clearance of eight thousandths of an inch.

178. Water is used in these dashpots on account of its vicosity being constant from practically the freezing to the boiling point. These dashpots being designed for water, will not be satisfactory at all if any kind of oil is used except for a seal as above. In case the oil should from any cause get into the needle valve, the dashpot should be removed, after which remove the needle valve, thoroughly clean and refill.

179. The oil seal, may not become constant for several days. However, the water should not be allowed to fall much more than $\frac{1}{8}$ inch below the lower graduation and should be kept filled with the water by the fountain pen filler, care being taken to have the point of the filler below the oil before discharging the water. The bulb should be kept pressed until entirely removed, to prevent either withdrawing the water or the oil. After the oil seal has become constant the dashpots should not require attention oftener than once a month; to keep the level as above, the oil should not evaporate appreciably.

180. After these dashpots have been in service about one year, they should be removed, cleaned, and refilled, as above, and placed back in position. At these times, it would be well to remove the valves *31* and *36* and wipe them off carefully and clean out bypass in each dashpot.

181. Adjustment of Vibrating Magnet Spring—With the regulator in service and all the rheostats turned to their predetermined marked positions, then the proper adjustment of the vibrating magnet spring *37* should be such that the top of the lever *9* would be even with the top of the centering post *10* midway of the exciter voltage range. See following table. For example, the range being 1 to $2\frac{1}{2}$ or 60 to 150 volts on 125-volt exciters, the lever should assume the position, as above, at 105 volts excitation. Then at the minimum excitation or 60 volts, the lever *9* would be about $\frac{1}{32}$ inch above the top of the post *10* and would be about $\frac{1}{32}$ inch below the top of the post *10* at 150 volts. The travel of the lever *9* would be practically the same for all ranges of exciter voltage.

182. The midway point, as above, for the correct position of lever *9* relative to the centering post *10* for the different exciter voltages are as follows:

Exciter System	Middle Point
125 Volt	105
250 Volt	210

183. To put the levers in the proper position with the regulator in service, as above, when the exciter voltage is below the values given in the table, it can be brought to the required value by slowly turning in the alternating-current generator field rheostat. Then if the lever *9* and post *10* do not coincide, as above, **the lever *9* should be brought to this position by adjusting the spring *37*, leavinng the lock nuts *38* securely tightened.** A wrench is furnished with the regulator that fits nut *38*. When spring *37* is once properly adjusted, it needs no further attention.

184. Spring *37* should never be adjusted in an attempt to raise or lower the alternating-current voltage.

Relays

185. There is only one type of relay used for all these regulators, a front and side view of which are shown in Fig. 13. The contacts only, differ, depending upon the requirements.

186. It will be seen that this relay is of the unit type, having its complete parts assembled on the base *1*.

187. Adjustment of Pivot Bearings and Armature—The pivot sockets *2* and *3* should first be adjusted to give no freedom of movement to the pivot *4*, and the sockets *2* and *3* should each extend about an equal distance from the base *1*, as shown. While the bearings are tight, the armature *5* should be adjusted on the pivot to come centrally over the expanded core heads *6*, after which the armature should be held in this position, by securely tightening the set screw *7*. To prevent binding at the pivot, one of the pivot sockets *2* or *3* should now be made free enough to give the armature a very slight side play, after the set screws *8* and *9* have been securely tightened. **These should be kept in this adjustment.**

188. Cleaning the Armature Stop—An accumulation of dirt on brass stop *16* at the top of the front pole piece will sometimes cause the armature to stick and make instability in the A-C. voltage. In case the rate of vibration becomes noticably slow under regular operating conditions or in case instability develops, the regulator should be taken out of service and the stop thoroughly cleaned. This may be done by inserting a piece of paper between the armature and the stop and pressing

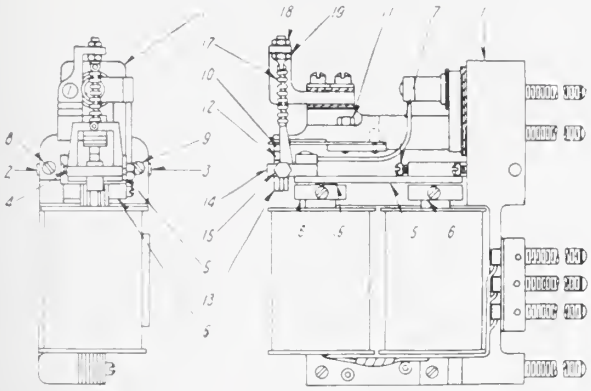

Fig. 13—Details of Construction of Regular Relays

the armature lightly against the paper. The paper should then be withdrawn. Several repetitions of this operation will probably be necessary to remove all the accumulation.

189. Adjustment of Relay Contacts—The upper relay contact *10* is mounted on a flat spring which is slotted at the back end so it can readily be removed or adjusted, by merely loosening clamp screw *11*. A special wrench is furnished with the regulator for this purpose.

190. The lower contact *12* is mounted on a stud *13*. This stud is a sliding fit in contact holder *14*. The contact stud *13* is flattened on one side, and this portion should always be kept under the set screw *15* which holds the stud in position. The contacts *10* and *12* should be first set evenly one above the other, and contact *10* made secure in this position, by tightening the clamp screw *11*. The gap between the contacts should now be made *14* mils by the gauge *14* furnished with the regulator, when the contact holder *14* is pressed down until armature *5* is in firm contact with the stop block *16*. After the set-screw *15* holding contact *12* in place has been securely tightened, the gauge *14* should just pass between the contacts without causing contact *10* to be deflected from its normal position. A small flat wrench is furnished with the regulator for screw *15*. Do not strain this screw, but just bring to a firm bearing.

191. Relay spring *17* should never be tampered with when replacing or adjusting the relay contacts.

192. Contacts for Rheostat Shunting Relays—The contacts are alike for all rheostat shunting relays. No definite time can be given for their attention, as the conditions on them vary considerably. However, they should not be allowed to wear away so that the gap is much more than that given above. If the contacts wear evenly, then contact *12* only, will require readjusting occasionally to keep the gap correct. Should they wear unevenly, remove them and file the surface flat as before, replace and adjust same as above. These relays are always numbered consecutively from 1 to the number required on aregulator.

193. Contacts for V and X Relays—The vibrating magnet relays are always marked *V*. The master relays are always marked *X* or *X*-1, etc., depending on the number required for each regulator.

194. The contacts are alike for these relays, but are different from those used in the rheostat shunting relays; and they should never be interchanged, as they will both be unsatisfactory when misplaced.

195. The *V* relay contacts will not wear appreciably, but they should be removed and smoothed off with a file about once a year. These contacts with proper care should last several years.

196. The wear of the *X* or master relay contacts will vary, depending on the number of relays operated by them. These may need resetting and possibly smoothing off a little with a file once every four to eight months.

197. The adjustment of the *V* and *X* relay contacts is the same in every way, as above.

198. No contacts, other than those furnished by this Company, should be used in any of the above relays.

199. Adjustment of relay spring—The proper adjustment of the relay tension spring *17* should be made as follows:—

200. The relay contacts should first be properly adjusted, as above, then the normal current should be passed through the relays for at least one-half hour, before finally adjusting the spring *17*. This normal current would be at the rated voltage of the exciters, as indicated in the table when the relay is connected with each regulator. With normal voltage on the source of direct-current supply for the relay circuit, as above close the single-pole disconnecting switch at *F*, and open the reversing switch *M*. by placing it in the central position so that it is not making contact on either side, and if there are any *X* or *X*-1, etc., reversing switches, these should also be placed in the same central position. This will

admit of the proper energizing of the relays, and they should be sufficiently warm in about one-half hour's time for the final adjustment of the spring. The following table is given for the floating point of the armature, between the stop *16* and contact *10*, at the different ranges of exciter voltage for the regulators.

Exciter System Voltage	Voltage of Relay Circuits	Floating Point
125 Volts	60–150	45 Volts
250 Volts	120–300	90 Volts
Broad Range	125	45 Volts
..	250	90 Volts

201. For example, suppose the relay spring *17* is to be adjusted for 125 volt exciters, the proper floating point for the armature in this case would be 45 volts, as indicated. Then, assuming the relays to be warm, and that the reversing switches are set as above, the voltage of the relay circuit should then be made exactly 45 volts and maintained at this value, until all relay springs on the regulator have been adjusted.

202. After the 45 volts have been obtained, before adjusting the springs, the single-pole disconnecting switch at *F* should be opened and closed, in order to remove the residual. The opening of this switch should be repeated at the final adjustment of each spring. Spring *17* should now be weakened or strengthened, as the case requires, so that the armature *5* will practically float, and contact will not be made at the stop *16* or at the contact *10*. A slight touch of the finger on the contact holder *14* to just close the contacts *10* and *12* or to just bring the armature *5* against the stop *16*, will readily determine the floating point, and this floating point should be obtained after the lock nuts *18* and *19* are securely tightened by the small wrench furnished with the regulator. After this spring has once been properly adjusted, it will require no further attention, and should never be disturbed, when adjusting or removing contacts *10* and *12*. This spring adjustment applies to the *X* and *V* relays, as well as to all, the rheostat shunting relays.

Reversing Switches and Disconnecting Switches

203. The complete reversing and disconnecting switch is shown in Fig. 12. These switches are the same for all regulators. It will be noted that in the end of the handle on each reversing switch, there is a number or a letter. This number applies to the reversing switch or its corresponding disconnecting switch. The reversing switches having numbers are for reversing the polarity of the relay contacts at the corresponding number, and the disconnecting switch at the bottom is for opening the rheostat shunt circuit, to this relay.

204. The reversing switch marked *M* is for reversing the polarity of the main contacts.

205. The switches marked *X*, *X*-1, etc., are for reversing the polarity of the corresponding master relay contacts.

206. To keep the contacts clean and in good condition, these reversing switches should be thrown to an extreme position, either up or down, once a day. A simple means of knowing when these switches have been thrown would be to throw them all up on the mornings of the even days of the month and all down on the odd days. These switches should always be kept in one or the other extreme positions as it is never necessary to keep them in a central position.

207. The single pole-disconnecting switches should be kept open on all exciters, not in service.

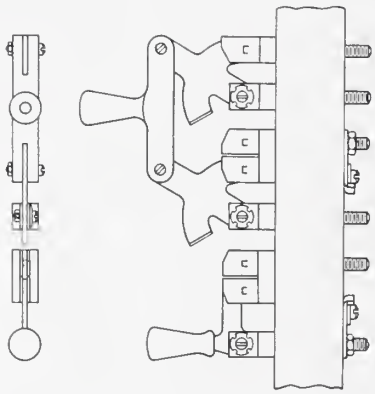

Fig. 14—Reversing and Disconnecting Switch

208. With these two views of the reversing and disconnecting switches, the complete circuits can readily be traced on all internal wiring diagrams of the regulator.

209. Disconnecting switches *E* and *F* are for opening the alternating current and direct-current circuits of the regulator, respectively.

PARALLEL OPERATION OF REGULATORS

210. When two or more voltage regulators are operated in parallel, certain precautions must be taken in order to prevent instability. Two voltage regulators, each having control of an alternating current generator in parallel

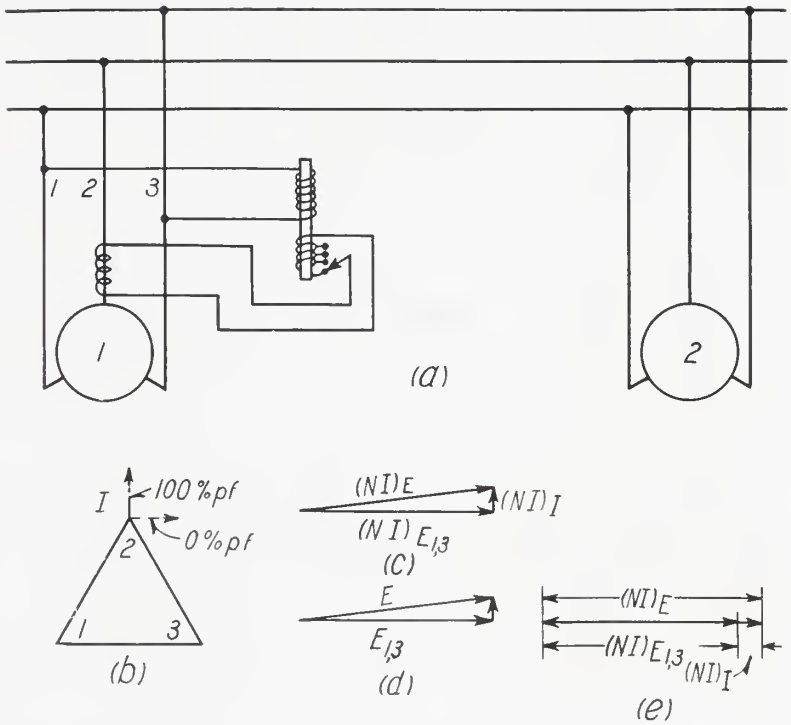

Fig. 15

on the same bus will not operate. The phenomena involved is identical with the case of two compound wound D-C. generators in parallel without an equalizer.

211. In the parallel operation of D-C. generators, the variation of field excitation of one generator produces a change in both the output of the generator and the base voltage. For stable parallel operation of D-C. voltage regulators, it is necessary that the regulated voltage should fall as the armature current increases.

212. The parallel operation of A-C. generators differs fundamentally from the parallel operation of D-C. generators in that field excitation of the A-C. generators plays no part in the division of the power supplied by the generators.

Changes in the field excitation of alternators in parallel directly affect the wattless power supplied by the generator.

213. Since a voltage regulator acts directly on the field excitation, it is clear that the division of power between regulators is unaffected by a voltage regulator whereas the division of wattless power is directly affected. In this respect, the parallel operation of A-C. regulators differs greatly from that of D-C. regulators. To secure stability in parallel with A-C. regulators, it is only necessary to give the regulated voltage a **droop with increase in the wattless component of the generated current** while in D-C. regulation, the voltage drop must be with respect to the total load current. The over all regulation, therefore, is better with A-C. regulators than with D-C.

214. The inherent droop with respect to wattless power may be obtained by affecting the regulator with a current from a series transformer in the middle leg of a 3 phase circuit as shown in Fig. 15 (a). At 100% power factor, the current in the transformer is at right angles to the phase voltage $E_{1,3}$ (Fig. 15b). In Fig. 15 (c), $(NI)_{E_{1,3}}$ is the excitation in ampere turns due to the bus voltage, $E_{1,3}$ and $(NI)_I$ is the excitation of the series winding on the regulator. $(NI)_E$ is the resultant excitation of the control magnet which must remain constant at all power factors since it must balance the constant core weight. Fig. 15 (d) illustrates the voltage relation at 100% power factor. $E_{1,3}$ represents the voltage which the regulator would maintain if the series winding were omitted. E

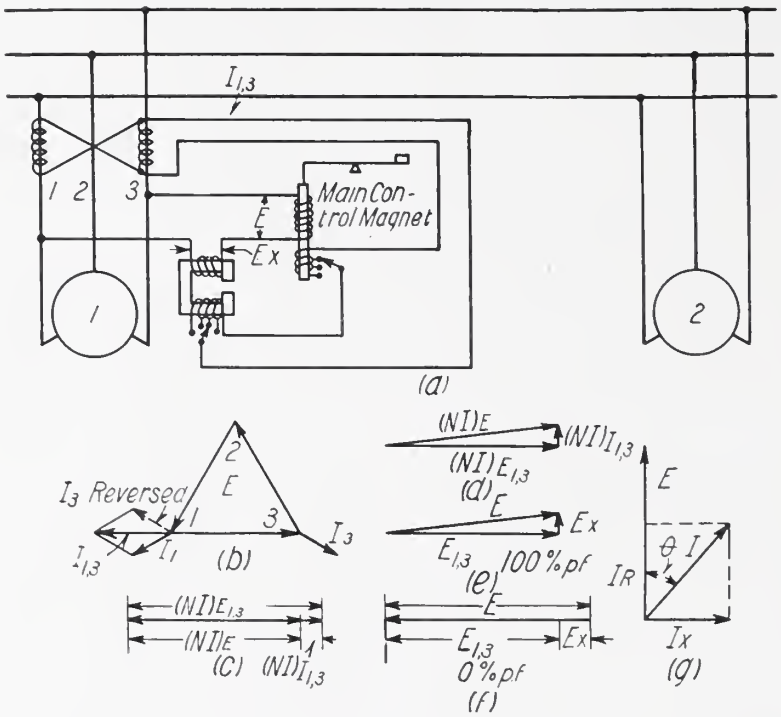

Fig. 16

represents the voltage for which the regulator regulates using the series winding at 100% power factor. As these vectors are substantially the same length, it will be readily seen that the series transformer does not materially affect the regulated voltage at 100% power factor.

215. At Zero power factor, however, the component (NI) 1 swings through 90 degrees and directly adds to the potential winding (Fig. 15e). In other words, the series winding alters the voltage but little at 100% power factor loads, but is directly effective at zero power factor loads, that is, it lowers the voltage directly in proportion to the wattless component of power supplied by the generator. This is the condition required for stability in parallel. Care must be taken to see that the polarity of the series winding is such that the voltage is always reduced when the generator feeds wattless into the system. **If the connections are reversed, violent surging will result. It is to be noted that the effect of reversing the connections is precisely the same as that of the inductive compensator previously described. In other words, compensating for the inductive component of line drop is precisely the same thing as giving the regulator a rising characteristic in proportion to the wattless component, which means instability if regulators are operated in parallel. Accordingly, it is never permissible to attempt to compensate for the inductive component of line drop if regulators are operated in parallel, unless** the junction point of the two systems is at considerable distance from the station buses, and then it is not permissible to compensate for the whole drop up to the junction point, but at least a 6% droop must remain.

216. If it is desired to give the station bus a rising characteristic, it may be accomplished by the connections shown in Fig. 16 (a) which is the same as used for complete line compensation except that the polarity of the primary leads are reversed. At 100% power factor the resultant current from the series transformers passing through the series coils on the regulator will have the effect of raising the station voltage, in direct proportion to the watted component, that is, to the kw. output of the station.

Referring to Fig. 16(c) which shows the effect of the **series winding** at 100% p. f., it is clear that the length of $(NI)_{I_{1,3}}$ is proportional

to the station output in kw. and therefore the rise in regulated voltage is proportional to the kw. output.

217. At 0% p.f. diagram 16(d) shows (NI) $I_{1,3}$ at right angles to (NI) $E_{1,3}$. The resultant (NI)E is approximately the same length as (NI)$E_{1,3}$ hence the regulated voltage is practically unaltered by (NI)$I_{1,3}$, i.e., the compensation due to the series winding is negligible at zero p.f., but has full effect at 100% p.f. Since the series winding has no effect at 0% p.f., it does not compensate completely with respect to wattless current. It does, however, compensate at 100% p.f. or for the watt component.

218. Now, since the power component of the load current is in phase with the voltage, **this component** is a 100% p.f. current and it is evident that the series winding compensates for the power component. This will be illustrated more fully later.

219. The inductive compensator is connected in every way as if it were going to be used to compensate for inductive line drop, except the connections to the primary winding are reversed, so that it reduces the voltage instead of raising it. This element lowers the regulated voltage in proportion to the wattless component and affords the stabilizing element for parallel operation. That is, it plays the same part as the single current transformer, Fig. 15.

220. Fig. 16(e) and 16(f) illustrate the action of the compensator connected in such a way as to give a droop with increase of wattless current at 100% and zero power factor. $E_{1,3}$ represents the voltage for which the regulator would regulate if the compensating coil were not connected in. E represents the resultant bus voltage due to the addition of the potential transformer voltage and the compensator voltage. As the length of E is practically the same as $E_{1,3}$ at 100% power factor, the compensator does not compensate with respect to the power component of the current. It does however have its maximum effect at zero power factor. Now, since the wattless component of the load current is 90 degrees out of phase with the voltage, this component is a zero power factor current and effects directly the regulated voltage.

221. A clearer understanding of the action which takes place in the compensator and the series winding at other power factors than zero and unity can be gained by referring to Fig. 16(g). E represents the phase position of the bus voltage and I the load current lagging the voltage by some angle. Resolving the current into its components, I_R is the part in phase with the voltage and Ix is the part at 90 degrees to the voltage. In other words, I_R is at unity power factor with the voltage and Ix is at zero power factor with it. Now we can consider that I_R, the power component, directly affects the core of the regulator through the series winding but has practically no effect through the external compensator. Also, Ix, the wattless component, has no effect on the regulated voltage through the series winding but is directly effective through the external compensator. If the series winding, therefore, is so connected as to raise the regulated voltage, the bus voltage will rise in proportion to increase in the power component of the current. Again, if the compensator is so connected as to insure stability under parallel operation, the bus voltage will fall in proportion to increase the lagging wattless current.

222. It is permissible to compensate by any amount for the watted component of the station output, without danger of instability since the governors on the prime movers determine the watted component. Since it is not permissible to compensate for the inductive component of line drop when operating in parallel, ohmic compensation is the only thing available, and may be adjusted to compensate for the entire drop both ohmic and inductive **at the average power factor of the system.** If the system power factor is approximately constant, this method is very satisfactory. If, however, the system power factor varies, it may be necessary to supplement the compensation by occasional hand adjustments of the voltage adjusting rheostat.

223. It is sometimes desirable to make one station carry a greater percentage of wattless power than its neighbor. This may be accomplished by giving this station less inherent droop and increasing the inherent droop in the other station. If the drooping compensation is cut out of the regulator in one station, this station will take all the variations in wattless power; however, the other station must have double the inherent droop to maintain stability, and accordingly, will take practically none of the wattless power. If the two regulators are

adjusted for the same no load voltage, the second station will operate at approximately 100% power factor.

224. If it is desired to make one station voltage follow another station voltage, automatically, it may be accomplished by using a correspondingly large amount of compensation in the drooping compensator. In order to make this station carry its share of wattless power, however, it is necessary to overcompensate on the watted component, that is, secure a rising characteristic by means of the series winding on the regulator Fig. 16 (a).

225. Nearly all practical operating conditions can be met by regulators provided with the proper compensating devices, provided due care is taken to secure the inherent droop with respect to wattless lagging current to insure the necessary stability in parallel. If the stations are connected by long transmission lines or have transformers between them with sufficient reactance, it is unnecessary to provide any special compensation on the voltage regulators to secure stability in parallel.

226. In practice, it has been found that it is necessary to have at least 4% inherent droop, and preferably 6% to secure satisfactory stability in parallel. This percentage droop is estimated on the assumption that at full load, zero power factor, the bus voltage would fall 6%. The actual drop with this adjustment for full load, 80% power factor would be 6% x .60 = 3.6%, since the wattless component a 80% power factor is 60%.

The Company's Works at East Pittsburgh, Pa.

Westinghouse Products

A few of the Westinghouse Products are listed below and will furnish some idea of the great variety of electrical apparatus manufactured by the Company and the many extensive fields for their use.

For Industrial Use

Instruments

Motors and controllers for every application, the more important of which are: Machine shops, woodworking plants, textile mills, steel mills, flour mills, cement mills, brick and clay plants, printing plants, bakeries, laundries, irrigation, elevators and pumps.

Welding outfits

Gears

Industrial heating devices, such as: Glue pots, immersion heaters, solder pots, hat-making machinery and electric ovens.

Lighting Systems

Safety switches

For Power Plants and Transmission Lines

Circuit-breakers and switches
Condensers
Controllers
Control switches
Frequency changers
Fuses and fuse blocks
Generators
Insulating material
Instruments
Lamps, incandescent and arc
Lightning arresters
Line material
Locomotives
Meters
Motors
Motor-generators
Portable Power Stands, 110 volts
Rectifiers
Regulators
Relays
Solder and soldering fluids
Stokers
Substations, portable and automatic
Switchboards
Synchronous converters
Transformers
Turbine-generators

For Transportation

Locomotives
Railway equipment
Marine equipment

For Mines

Lamps
Locomotives
Motors for hoists and pumps
Motor-generators
Portable substations
Switchboards
Line material
Ventilating outfits

For Farms

Fans

Household appliances

Motors for driving churns, cream separators, corn shellers, feed grinders, pumps, air compressors, grindstones, fruit cleaning machines and sorting machines.

Generators for light, power and heating apparatus

Portable Power Stands, 32 Volts
Radio Apparatus
Transformers

For Office and Store

Electric radiators
Fans
Arc lamps
Incandescent lamps

Small motors for driving addressing machines, dictaphones, adding machines, cash carriers, moving window displays, signs, flashers, envelope sealers, duplicators, etc.

Ventilating outfits

For Electric and Gasoline Automobiles and the Garage

Battery charging outfits
Charging plugs and receptacles
Lamps
Instruments
Motors and controllers

Small motors for driving lathes, tire pumps, machine tools, polishing and grinding lathes.

Solder and soldering fluids

Starting, lighting and ignition systems, embracing: Starting motor generators, ignition units, lamps, headlights, switches, etc.

Tire vulcanizers

For the Home

Electric ware, including: Table stoves, toasters, irons, warming pads, curling irons, coffee percolators, chafing dishes, disc stoves, radiators and sterilizers.

Automatic electric ranges
Fans
Incandescent lamps
Radio Apparatus

Small motors for driving coffee grinders, ice cream freezers, ironing machines, washing machines, vacuum cleaners, sewing machines, small lathes, polishing and grinding wheels, pumps and piano players

Sew-motors

Westinghouse Electric & Manufacturing Company

East Pittsburgh, Pa.

WESTINGHOUSE DISTRICT OFFICES

ALBANY, N. Y., Journal Building.
ATLANTA, GA., Candler Bldg., 127 Peachtree St.
BALTIMORE, MD., Westinghouse Bldg., 121 E. Baltimore St.
BIRMINGHAM, ALA., Brown-Marx Bldg., 2000 First Ave.
BLUEFIELD, W. VA., Law and Commerce Bldg., Federal and Raleigh Streets
BOSTON, MASS., Rice Building, 10 High St.
BUFFALO, N. Y., Ellicott Square Bldg., Ellicott Square.
BUTTE, MONT., Montana Electric Co. Bldg., 52 East Broadway.
CHARLESTON, W. VA., Kanawha National Bank Bldg., Capitol and Virginia Streets.
CHARLOTTE, N. C., Commercial Bank Bldg., 200 S. Tryon St.
CHATTANOOGA, TENN., Hamilton National Bank Building, 701 Market St.
CHICAGO, ILL., Conway Bldg., 111 W. Washington Street.
CINCINNATI, O., Westinghouse Bldg., Third and Elm Sts.
CLEVELAND, O., Swetland Bldg., 1010 Euclid Ave.
COLUMBUS, O., Interurban Terminal Bldg., Third and Rich Sts.
DALLAS, TEX., Magnolia Bldg., Akard and Commerce Street.
DAYTON, O., 14 West Fourth Street.
DENVER, COLO., Gas and Electric Bldg., 910 Fifteenth St.
DES MOINES, IOWA., 608 Securities Bldg., 412 W. Seventh St.
DETROIT, MICH., 1535 Sixth Street.
DULUTH, MINN., Alworth Bldg., 306 West Superior St.
EL PASO, TEX., Mills Bldg., Oregon and Mills St.
FRESNO, CAL., J and Mariposa Streets.
HOUSTON, TEX., Union National Bank Building, Main and Congress Streets.
HUNTINGTON, W. VA., Westinghouse Electric Building, Corner Second Avenue and Ninth Street.
*Government business exclusively.
INDIANAPOLIS, IND., Traction Terminal Bldg., Illinois and Market Sts.
JACKSONVILLE, FLA., Union Terminal Warehouse, East Union and Ionia Streets
KANSAS CITY, MO., Orear-Leslie Bldg., 1012 Baltimore Ave.
LOUISVILLE, KY., Paul Jones Bldg., 312 Fourth Ave.
LOS ANGELES, CAL., 418 So. San Pedro Street.
MEMPHIS, TENN., Exchange Bldg., 130 Madison Ave.
MILWAUKEE, WIS., First National Bank Bldg., 425 E. Water St.
MINNEAPOLIS, MINN., 2303 Kennedy Street, N. E.
NEW ORLEANS, LA., Maison Blanche Bldg., 921 Canal St.
NEW YORK, N. Y., City Investing Bldg., 165 Broadway.
NIAGARA FALLS, N. Y., 205 Falls Street.
PHILADELPHIA, PA., Widener Bldg., 1325-1329 Chestnut St.
PITTSBURGH, PA., Union Bank Bldg., 306 Wood St.
PORTLAND, ORE., Northwestern Bank Bldg., Broadway and Morrison Sts.
RICHMOND, VA., Virginia Rwy. and Pr. Bldg., Seventh and Franklin Streets
ROCHESTER, N. Y., Chamber of Commerce Bldg., 119 E. Main Street.
ST. LOUIS, MO., 300 N. Broadway.
SALT LAKE CITY, UTAH, Walker Bank Bldg., Second Street, South and Main Sts.
SAN FRANCISCO, CAL., First National Bank Bldg., 1 Montgomery St.
SEATTLE, WASH., Westinghouse Bldg., 3451 E. Marginal Way.
SYRACUSE, N. Y., University Bldg., 120 Vanderbilt Square.
TOLEDO, O., Ohio Bldg., Madison Ave and Superior St.
TUCSON, ARIZ., Immigration Bldg., 90 Church Street.
WASHINGTON, D. C., *Hibbs Bldg., 723 Fifteenth St., N. W.
WILKES-BARRE, PA., Miner's Bank Building, W. Market and Franklin Streets.
The Hawaiian Electric Company, Ltd., Honolulu, T. H.—Agent

WESTINGHOUSE AGENT JOBBERS

ATLANTA, GA., Gilham Schoen Electric Co.
BIRMINGHAM, ALA., The Moore-Handley Hardware Co.
BLUEFIELD, WEST VIRGINIA, Superior Supply Co.
BUFFALO, N. Y., McCarthy Bros. & Ford
BUTTE, MONTANA, The Montana Electric Co.
CHICAGO, ILL., Illinois Electric Co.
CHARLOTTE, N. C., Carolina States Electric Co.
CINCINNATI, OHIO, The Johnson Electric Supply Co.
CLEVELAND, OHIO, The Erner Electric Co.
DENVER, COLO., Mine & Smelter Supply Co.
DETROIT, MICH., Commercial Electric Supply Co.
EL PASO, TEXAS, Mine & Smelter Supply Co.
EVANSVILLE, IND., The Varney Electrical Supply Co.
HOUSTON, TEXAS, Tel-Electric Co.
HUNTINGTON, WEST VIRGINIA, Banks Supply Co.
INDIANAPOLIS, IND., The Varney Electrical Supply Co.
JACKSONVILLE, FLA., Pierce Electric Co.
KANSAS, CITY, MO., Satterlee Electric Co.
LOS ANGELES, CAL., Illinois Electric Co.
LOUISVILLE, KY., Tafel Electric Co., Inc.
MEMPHIS, TENN., Riechman-Crosby Co.
MILWAUKEE, WIS., Julius Andrae & Sons Co.
NEW HAVEN, CONN., Hessel & Hoppen Co.
NEW ORLEANS, LA., Electrical Supply Co.
NEW YORK, N. Y., Alpha Electric Co.
OKLAHOMA CITY, OKLA., United Electric Co.
OMAHA, NEB., The McGraw Co.
PHILADELPHIA, PA., H. C. Roberts Electric Supply Co.
PITTSBURGH, PA., Robbins Electric Co.
PORTLAND, ORE., Fobes Supply Co.
RICHMOND, VA., Tower-Binford Electric & Mfg. Co.
ROCHESTER, N. Y., Rochester Electrical Supply Co.
SALT LAKE CITY, UTAH, Intermountain Electric Co.
SAN FRANCISCO, CAL., Electric Rwy. & Mfrs. Supply Co.
SCRANTON, PA., Penn. Electrical Engineering Co.
SEATTLE WASH., Fobes Supply Co.
SIOUX CITY, IOWA, The McGraw Co.
SPOKANE, WASH., The Washington Electric Supply Co.
ST. JOSEPH, MO., Columbian Electrical Co.
ST. LOUIS, MO., The McGraw Company
ST. PAUL, MINN., St. Paul Electric Co.
SYRACUSE, N. Y., H. C. Roberts Electric Supply Co.
TAMPA, FLA., Pierce Electric Co.
WASHINGTON, D. C., H. C. Roberts Electric Supply Co.
WICHITA, KANSAS, United Electric Co.

WESTINGHOUSE SERVICE SHOPS

ATLANTA, GA. ..... Cor. Markham and Mangum Sts.
BALTIMORE, MD. ..... 501 East Preston St.
BOSTON, MASS. ..... 12 Farnsworth St.
BRIDGEPORT, CONN. ..... Bruce Ave. and Seymour St. Stratford
BUFFALO, N. Y. ..... 141-157 Milton St.
CHICAGO, ILL. ..... 32 South Peoria St.
CINCINNATI, O. ..... Third and Elm Sts.
CLEVELAND, O. ..... 1255 West Fourth St.
DENVER, COLO. ..... 1909-11-13-15 Blake St.
DETROIT, MICH. ..... 1535 Sixth St.
HARTFORD, CONN. ..... 220 Market St.
HUNTINGTON, W. VA. ..... 9th Street and 2nd Ave
JOHNSTOWN, PA. ..... 47 Messenger St.
LOS ANGELES, CAL. ..... 2019 Bay St.
MINNEAPOLIS, MINN. ..... 2303 Hennedy St., N. E.
NEW YORK, N. Y. ..... 467 Tenth Ave.
PHILADELPHIA, PA. ..... 214-220 North 22nd St.
PITTSBURGH, PA. ..... 6905 Susquehanna St.
ST. LOUIS, MO. ..... 12th and Gratoit Sts.
SALT LAKE CITY, UTAH ..... 573 W. 2nd St So.
SAN FRANCISCO, CAL. ..... 1400 Fourth St.
SEATTLE, WASH. ..... 3451 East Marginal Way.
SPRINGFIELD, MASS. ..... 82-86 Worthington St.

WESTINGHOUSE MARINE SERVICE PORT ENGINEERS

BALTIMORE ..... 109 South Street
NEWPORT NEWS ..... Foot Warwick Pier
NEW ORLEANS ..... 921 Canal Street
NEW YORK ..... 596 Court Street, Brooklyn
PHILADELPHIA ..... 1442 Widener Bldg.
SAN FRANCISCO ..... 141 Second Street
SAVANNAH ..... 406 E. 39th Street

CANADIAN COMPANY

CANADIAN WESTINGHOUSE COMPANY, LTD., Hamilton, Ontario

WESTINGHOUSE ELECTRIC INTERNATIONAL COMPANY

165 BROADWAY, NEW YORK, U. S. A.

Westinghouse Press
Printed in U. S. A.